GRUNDIG

SCHALTBILD
CIRCUIT DIAGRAM
SCHEMA

TV

Schaltbild
Circuit
Diagram
Schema

D Btx * 32700 #

CUC 1881

(9.21010-01)
(9.21009-01)

D

Abgleichvorschriften

Alle nicht beschriebenen Einstellelemente sind werksseitig abgeglichen und dürfen im Service-Fall nicht verstellt werden.

1. Serviceeinstellungen über Bildschirm-Menü

1.1 Tuner-AGC

Nach Austausch oder Reparatur des ZF-Verstärkers oder des Tuners den verzögerten Regelspannungseinsatz kontrollieren und gegebenenfalls einstellen.

- Normtestbild auf hohen UHF Kanal legen, die HF sollte mindestens 1,5 mV (64 dBµV) betragen.
- Das Menü "Tuner-AGC" über das Service Programm "Info Center"--> "Sonderfunktionen" --> "Service" --> "Kennzahl 8500" --> über die Menüführung aufrufen.
- Mit den Tasten ◀ ▶ das Bild so abstimmen, daß der Sender gerade zu rauschen beginnt. Danach soweit zurückstellen daß das Bild gerade rauschfrei wird, Wert mit "OK" abspeichern.

1.2 Weißabgleich

Nach Bildrohrwechsel, Austausch oder Reparatur der Bildrohrplatte die Weißwerteinstellung kontrolieren und gegebenenfalls einstellen.

- Das Menü "Weißabgleich" über das Service Programm "Info Center" --> "Sonderfunktionen" --> "Service" --> "Kennzahl 8500" über die Menüführung aufrufen.
- Mit den Tasten ◀ ▶ die Werte für VG und VB so einstellen, daß das Weißfeld in der Bildmitte unbunt wird. Wert mit "OK" abspeichern.

2. Serviceeinstellungen am Chassis

2.1 Abgleich des Diodenmodulators

Die Brückenspule L 573 ist in der Fertigung richtig abgeglichen und solte nicht verdreht werden.

- Das Menü "Geometrie" über das Service Programm --> "Infom Center"--> "Sonderfunktionen" --> "Service" --> "Kennzahl 8500" aufrufen.
- Die Bildbreite auf Minimum stellen.
- Den Tastkopf eines Zweistrahloszilloskops an den Kollektor des Transistors T 572 einhängen.

GB

Adjustment procedures

All adjustment controls not mentioned in this description are adjusted during production and must not be re-adjusted in the case of repairs.

1. Service adjustments with the On-Screen Display

1.1 Tuner AGC

After replacement or repair of the IF amplifier or tuner check the Delayed Automatic Gain Control Voltage and re-adjust if necessary.

- Feed in a standard test pattern at a channel in the upper range of the UHF Band. The RF should be at least 1.5 mV (64 dBµV).
- Call up the "Tuner-AGC" menu via the Service Programme "Info Center"--> "Special Functions" --> "Service" --> "Code Number 8500".
- With the ◀ ▶ buttons tune the TV station that noise just begins to appear in the picture. Then tune in the reverse direction until the picture just becomes noise free. Store with "OK".

1.2 White balance

After replacement of the picture tube, replacement or repair of the picture tube panel, check the white balance and re-adjust if necessary.

- Call up the "White Balance" menu via the Service Programme "Info Center" --> "Special Functions" --> "Service" --> "Code Number 8500".
- With ◀ ▶ set the VG and VB values (amplification green and blue) so that the white rectangular area in the middle of the picture becomes achromatic. Store with "OK"

2. Service adjustments on the Chassis

2.1 Adjustment of the diode modulator stage

The bridge coil L 573 is correctly adjusted during production and should not be re-adjusted any more.

- Call up the "Geometry" menu via the Service Programme --> "Info Center"--> "Special Functions" --> "Service" --> "Code Number 8500".
- Set the horizontal amplitude to minimum.
- Connect one test probe of a dual-beam oscilloscope to the collector of the transistor T 572.

I

Taratura

Tutti i componenti non descriti, sono stati tarati in fabbrica e non devono essere regolati in caso di servizio.

1. Operazioni di servizio mediante menu'

1.1 AGC-Tuner

Dopo la sostituzione o la riparazione dell' amplificatore FI è necessario controllare ed eventualmente ritoccare la tensione di regolazione ritardata del Tuner.

- Applicare un monoscopio su un canale alto UHF. Il segnale AF deve essere almeno 1,5 mV (64dB µV).
- Richiamere il menu' "Tuner-AGC" mediante Service Programm "Info Center" --> "Funzioni speciali" --> "Service" --> "Codice 8500". Coi tasti ◀ ▶ regolare l'immagine finchè comincia ad apparire fruscio. Quindi regolare in senso contrario finchè l'immagine appare priva di fruscio e memorizzare con "OK".

1.2 Taratura del bianco

Dopo la sostuzione del cineescopio o di una riparazione sulla piastra cinescopio, è necessario controllare ed eventualmente ritoccare la taratura del bianco.

- Richiamere con il menu' "Taratura del bianco" mediante Service Programm "Info Center" --> "Funzioni speciali" --> "Service" --> "Codice 8500". Coi tasti ◀ ▶ regolare i valori per VG e VB modo che il campo bianco al centro dell' immagine sia privo di colore. Memorizzare con "OK".

2. Operazioni di taratura sul telaio

2.1 Taratura del modulatore a diodi

La bobina L 573 viene opportunamente tarata in fabbrica, quindi non devrebbe essere ritoccata.

- Richiamare il menu' "Geometria" mediante Service Programm "Info Center" --> "Funzioni speciali" --> "Service" --> "Codice 8500".
- Regolare la larghezza d'immagine al minimo.
- Applicare una sonda di un oscilloscopio o dopia traccia al collettore del transistor T 572.

Änderungen vorbehalten / Subject to alteration
Reservado el derecho de modificación

Printed in Germany
VK 223 1092

Schaltbild Sach-Nr. 72010-911.30
Circuit Diagram Part No. 72010-911.30

- Den anderen Tastkopf zwischen den Dioden D 571 und D 572 anschließen.
- Mit der Spule L 573 beide Oszillogramme auf gleiche Impulsbreite abgleichen.
- Bildbreite wieder nach Testbild einstellen und speichern mit "OK".

3. VT-Anpassungsabgleich

Der Einsteller R 2856 ist bei der Auslieferung auf kleinste Höhenanhebung eingestellt. Treten trotz einwandfreiem Antennensignal Zeichenfehler auf, R 2856 langsam verstellen, bis die Fehler verschwinden. Nicht weiterdrehen, da die Fehlerhäufigkeit wieder zunehmen kann.
Während des Abgleichs ist es notwendig, die Seite 199 ständig neu anzuwählen, da nur so die Seite neu eingelesen wird und eine Beurteilung der Fehlerschwelle möglich ist.

4. Bildrohrplatte

Einstellung der Schirmgitterspannung U_{SG}
Nach Bildrohrwechsel, Austausch oder Reparatur der Bildrohrplatte die Sperrpunkteinstellung überprüfen und wenn nötig einstellen.
- Testbild einspeisen.
- Bildschirmhelligkeit mit der Fernbedienung so einstellen, daß die Grauflächen gerade dunkel werden.
- Gerät auf AV-Betrieb schalten.
- An den Testpunkten R,G,B mit einem hochohmigem Voltmeter (Längswiderstand ca. 220 kOhm) die höchste Spannung ermitteln.
- Mit dem Einstellregler U_{SG} auf der Bildrohrplatte den höchsten Spannungswert auf ca. 175 V abgleichen.
  Bei Rücklaufstreifen auf dem Bildschirm, die Spannung um ca. 10 V niedriger einstellen.

- Connect the second test probe between the diodes D 571 and D 572.
- Adjust the coil L 573 so that both oscillograms have the same pulse width.
- Re-adjust the horizontal amplitude according to the test pattern and store.

3. Videotext matching adjustment

At the time of delivery the control R 2856 is set to the smallest treble boost .
If, with a perfect aerial signal, character faults occur, turn R 2856 slowly until the faults disappear. Do not turn R 2856 any further as the error rate may increase again.
Page 199 must always be selected new during the adjustment, so that the page is read in again making it possible to evaluate the error rate.

4. CRT board

Adjustment of the screen grid voltage U_{SG}
After replacement of the CRT tube, replacement or repair of the picture tube board check the cut-off point and re-adjust if necessary.
- Feed in a test pattern.
- With the remote control adjust the screen brightness so that the grey areas just become dark.
- Switch the TV receiver to AV operation.
- Connect a high-ohmic voltmeter (series resistance approx. 220 kOhm) to the test points R, G, B and determine the maximum voltage.
- With the control U_{SG} on the picture tube panel set the maximum voltage level to approx. 175 V.
  If retrace lines are visible on the screen reduce the voltage by approx. 10 V .

- L'altra sonda tra i diodi D 571 e D 572.
- Agendo su L 573 i due oscillogrammi devono presentare la medesima larghezza d'impulso.
- Ripristinare la larghezza d'imagine e memorizzare con "OK".

3. Adattamento VT

Dopo la sostuzione o la riparazione dell' unita di commando controllare l'adattamento VT.
Il trimmer R 2856 viene regolato al valore medio in fabbrica.
Nel caso di errore di decodificia nonostante un buon segnale in antenna, agire lentamente su R 2856 finchè l'errore si elimina.
Non regolare oltre altrimenti la possibilità di errore aumenta. Durante la regolazione è necessario richiamare spesso la pagina test di Televideo, solo cosi è possibile giudicare la soglia dell' errore.

4. Piastra cinescopio

Regolazione della tensione di griglia schermo U_{SG}
Dopo il cambiamento del tubo, sostituzione del cinescopio o di una riparazione sulla piastra cinescopio, controllare il valore del punto di blocco ed eventualmente correggerlo.
- Applicare un monoscopio
- Regolare la luminosità, mediante telecomando, finchè i gradini del grigio accennano a diventare scuri.
- Commutare l'apparecchio in AV.
- Con un volmetro ad alta impedenza (ca. 220 Kohm) individuare la tensione più elevata sui punti di misura RGB.
- Col trimmer U_{SG}, sulla piastra cinescopio, tarare per un valore max di ca. 175 V.
  Se appaino tracce di ritorno nell'imagine, ridurre la tensione di ca. 10 V.

Schaltplansymbole / Circuit diagram symbols / Simboli sullo schema

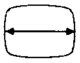
Zeilenbreite / Line width / Amplitude horizontale / Larghezza di riga / Amplitudo Horizontal

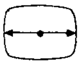
Hor. Frequenz / Hor. Frequency / Fréqu. horiz. / Frequ. orizz. / Frequ. horiz.

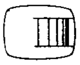
Hor. Linearität / Hor. linearty / Linéar. Horizont / Lineár. orizz. / Lineal. Horizontal

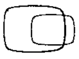
Bildlage hor. / Hor. picture position / Cadrage horizont. / Posizione orizz. dimmagine / Centrado horizontal

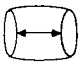
Ost-West Amplitude / East-West amplitude / Amplitude Est - Ouest / Ampiezza Est-Ovest / Amplitud E-O

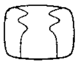
Ost-West Symmetrie / East-West symm. / Symm. Est-Ouest / Simm. Est-Ovest / Simetria E-O

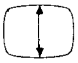
Bildamplitude / Frame ampl. / Ampl. verticale / Ampiezza d'immagine / Ampl. vertical

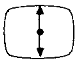
Vert. Frequenz / Vert. frequency / Fréqu. vert. / Frequ. vert. / Frequ. vert.

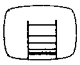
Vert. Linearität / Vert. linearity / Linéarité vert. / Linear. vert. / Linealidad vert.

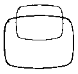
Bildlage vert. / Vert. picture position / Cadrage vertical / Posiz. vert. d'immagine / Centrado vert.

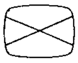
Focusregler / Focus control / Réglage de focalisation / Regolat. di focalizz. / Control de foco

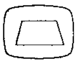
Trapez / Trapezium / Trapèze / Trapezio / Trapecio

Oszillogramme - Chassis / Oscillogrammes chassis / Oszillogrammi telaio

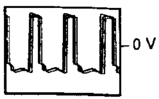

② 10 V_{SS} 2 µs/cm

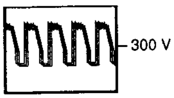

④ 500 V_{SS} 2 µs/cm

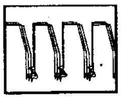
⑤ 600 V_{SS} 2 µs/cm

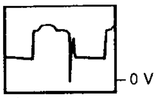

⑥ ca. 4 V_{SS} 5 µs/cm

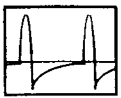
⑩ ca. 95 V_{SS} 5 µs/cm

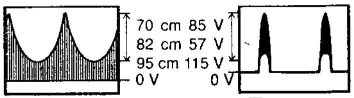

⑫ 2 ms/cm
70 cm 180 V_{SS}
82 cm 175 V_{SS}
95 cm 235 V_{SS}

⑫a 5 µs/cm
70 cm 180 V_{SS}
82 cm 175 V_{SS}
95 cm 235 V_{SS}

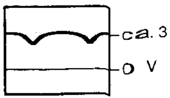

⑮ ca. 0,7 V_{SS} 2 ms/cm

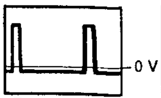

⑯ 5 µs/cm
70 cm 155 V_{SS}
82 cm 145 V_{SS}
95 cm 145 V_{SS}

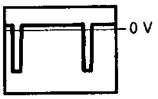

⑰ 5 µs/cm
70 cm 270 V_{SS}
82 cm 240 V_{SS}
95 cm 280 V_{SS}

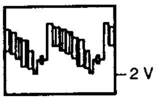

㉑ 2 V_{SS} 10 µs/cm

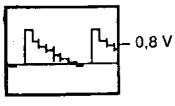

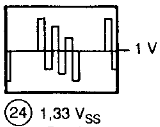

㉔ 1,33 V_{SS} 5 µs/cm

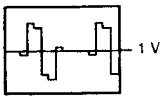

㉕ 1,05 V_{SS} 5 µs/cm

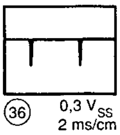
㊱ 0,3 V_{SS} 2 ms/cm

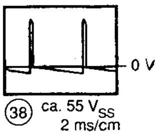

㊳ ca. 55 V_{SS} 2 ms/cm

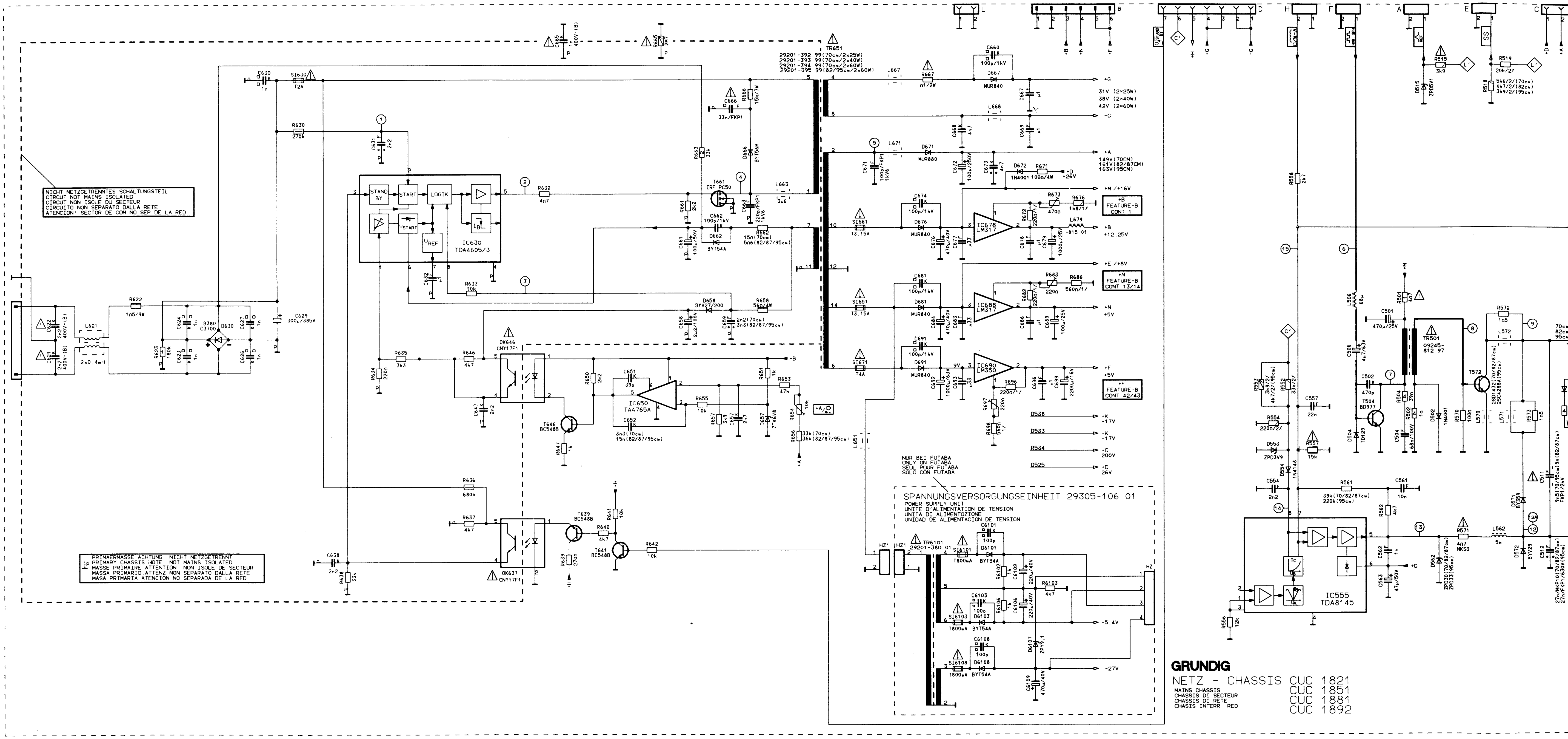
ZUR ENTSTOERPLATTE
TO INTERFERENCE ELIMINATION BOARD
VERS C.I. ANTIPARASITAGE
ALLA PIASTRA ANTIDISTURBI
A LA PLACA ANTIPARASITA
NICHT NETZGETRENNTES SCHALTUNGSTEIL
CIRCUIT NOT MAINS ISOLATED
CIRCUIT NON ISOLE DU SECTEUR
CIRCUITO NON SEPARATO DALLA RETE
ATENCION! SECTOR DE COM NO SEP DE LA RED
PRIMAERMASSE ACHTUNG NICHT NETZGETRENNT
PRIMARY CHASSIS NOTE NOT MAINS ISOLATED
MASSE PRIMAIRE ATTENTION NON ISOLE DE SECTEUR
MASSA PRIMARIO ATTENZ NON SEPARATO DALLA RETE
MASA PRIMARIA ATENCION NO SEPARADA DE LA RED
C630 1n
SI630 T2A
R630 270k
R622 1n5/9W
L621 2x0.4mH
B380 C3700 D630
C629 300µ/385V
C631 2n2
IC630 TDA4605/3
STAND BY
START
LOGIK
U_START
U_REF
R632 4n7
R633 10k
C632
R634 220k
R635 3k3
R646 4k7
OK646 CNY17F1
C647 2n2
R650 2k2
C651 39p
IC650 TAA765A
C652 3n3(70cm) 15n(82/87/95cm)
R655 10k
R657
R651 1k
R653 47k
R654 10k
R656 33k(70cm) 36k(82/87/95cm)
D657 ZPD6V8
T646 BC548B
R647 1k
R636 680k
R637 4k7
OK637 CNY17F1
C638 2n2
R638 33k
T639 BC548B
R639 270k
R640 4k7
R641 10k
T641 BC548B
R642 10k
C665 1n 400V-(B)
R665 2M2
C666 33n/FKP1
R666 15k/7W
D666 BYT56M
R643 33k
T661 IRF PC50
R661 2k2
C661 100µ/50V
C662 100p/1kV
D662 BYT54A
C663 220p/FKP1 1kV6
L663 3µ6
R662 15n(70cm) 5n6(82/87/95cm)
D658 BYV27/200
R658 560/4W
C658 2µ2/100V
C659 2n2(70cm) 3n3(82/87/95cm)
TR651
29201-392 99(70cm/2x25W)
29201-393 99(70cm/2x40W)
29201-394 99(70cm/2x60W)
29201-395 99(82/95cm/2x60W)
L667
R667 n1/2W
C660 100p/1kV
D667 MUR840
L668
C667
C668 4n7
C669
+G
31V (2x25W)
38V (2x40W)
42V (2x60W)
-G
C671 100p/FKP1 1kV6
L671
D671 MUR880
C672 100µ/250V
C673 4n7
D672 1N4001
R671 100n/4W
+D +26V
+A
149V(70CM)
161V(82/87CM)
163V(95CM)
+M /+16V
C674 100p/1kV
SI661 T3.15A
D676 MUR840
C676 470µ/40V
IC678 LM317
R672 220n/1/
R673 470n
R676 1k8/1/
L679
FEATURE-B CONT 1
+B
+12.25V
-815 01
+E /+8V
C681 100p/1kV
SI651 T3.15A
D681 MUR840
IC688 LM317
R682 220n/1/
R683 220n
R686 560n/1/
+N FEATURE-B CONT 13/14
+N
+5V
C691 100p/1kV
SI671 T4A
D691 MUR840
C692 1000µ/63V
IC690 LM350
R696 220n/1/
R697 220n
+F
+5V
+F FEATURE-B CONT 42/43
D538 +K +17V
D533 -K -17V
D534 +C 200V
D525 +D 26V
L651
NUR BEI FUTABA
ONLY ON FUTABA
SEUL POUR FUTABA
SOLO CON FUTABA
SPANNUNGSVERSORGUNGSEINHEIT 29305-106 01
POWER SUPPLY UNIT
UNITE D'ALIMENTATION DE TENSION
UNITA DI ALIMENTOZIONE
UNIDAD DE ALIMENTACION DE TENSION
TR6101 29201-380 01
SI6101 T800mA
D6101 BYT54A
C6101 100p
C6102 220µ/40V
R6103 4k7
C6103 100p
SI6103 T800mA
D6103 BYT54A
C6106 220µ/40V
-5.4V
C6108 100p
SI6108 T800mA
D6108 BYT54A
D6107 ZPY9.1
C6109 470µ/40V
-27V
HZ1
HZ
R558 2k7
R515 3k9
D515 ZPD5V1
R519 20k/2/
R518 5k6/2/(70cm) 4k7/2/(82cm) 3k9/2/(95cm)
SS
C501 470µ/25V
L506 68µ
C506 4µ7/63V
R501
TR501 09245-812 97
R572 1n5
L572
C502 470p
T504 BD977
R504
R502
C504 68n/100V
D504 TD129
D502 1N4001
R570 100k
L570
L571
R573 1n5
T572 2SD1432(70/82/87cm) 2SC4288A(95cm)
R553 3k9/2/ 4k7/2/(95cm)
R552 33k/2/
C557 22n
R554 220n/2/
D553 ZPD3V9
R557 15k
D554 1N4148
C554 2n2
R561 39k(70/82/87cm) 220k(95cm)
C561 10n
R562 4k7
IC555 TDA8145
C562 1n
C563 47µ/50V
R556 12k
R571 4n7 NKS3
L562 5µ
D562 ZPD30(70/82/87cm) ZPD33(95cm)
D572 BYV29
D571 BY359
C511 9n5(70/95cm) 12n(82/87cm) FKP1/2kV
C512 27n/MKP10(70/82/87cm) 27n/FKP1/630V(95cm)
70cm 82cm 95cm
+D
+A
+H
+G
-G
+B +N +F
L Y B D H F A E C
GRUNDIG

NETZ - CHASSIS CUC 1821
MAINS CHASSIS CUC 1851
CHASSIS DI SECTEUR CUC 1881
CHASSIS DI RETE CUC 1892
CHASSIS INTERR RED

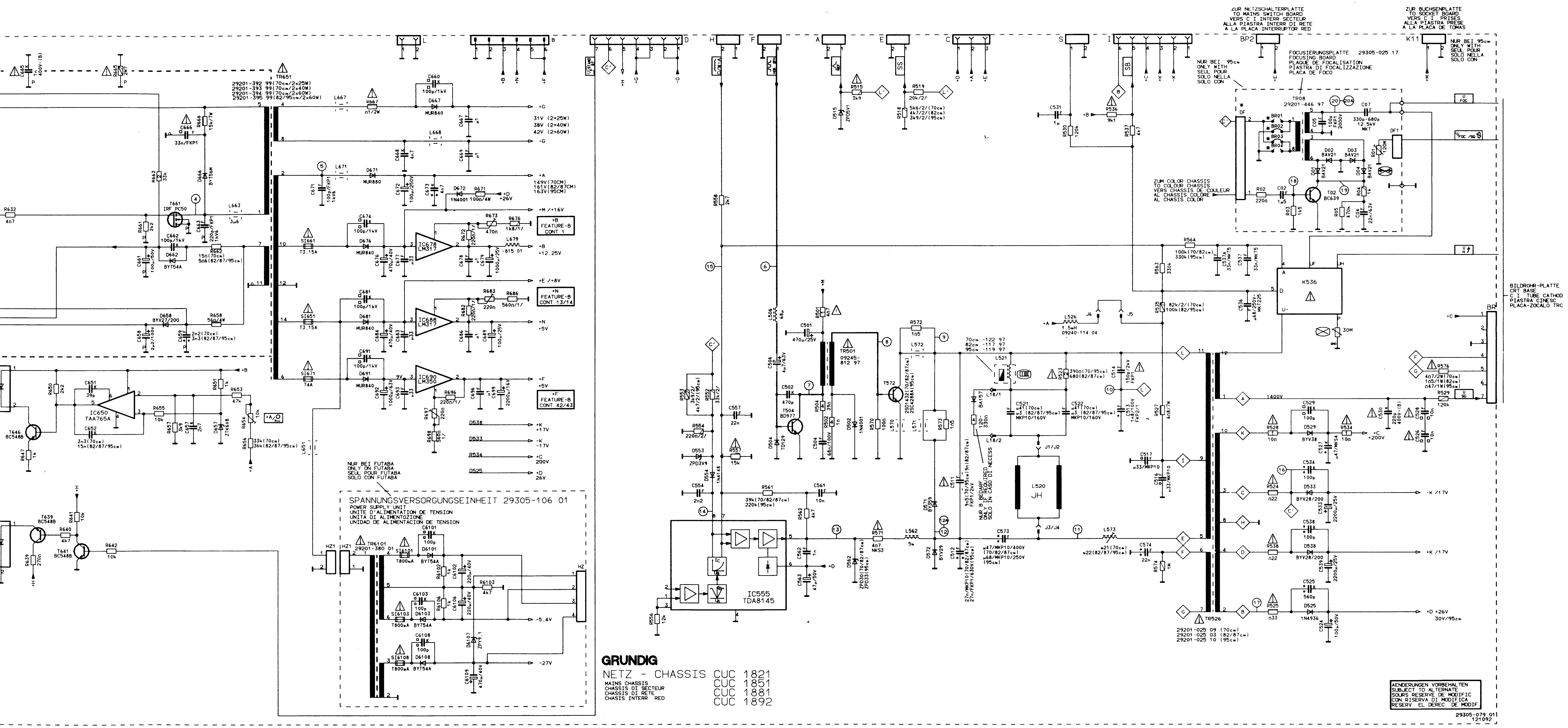
ZUR NETZSCHALTERPLATTE
TO MAINS SWITCH BOARD
VERS C I INTERR SECTEUR
ALLA PIASTRA INTERR DI RETE
A LA PLACA INTERRUPTOR RED
BP2
ZUR BUCHSENPLATTE
TO SOCKET BOARD
VERS C I PRISES
ALLA PIASTRA PRESE
A LA PLACA DE TOMAS
K11
NUR BEI 95cm
ONLY WITH
SEUL POUR
SOLO NELLA
SOLO CON
FOCUSIERUNGSPLATTE 29305-025 17
FOCUSING BOARD
PLAQUE DE FOCALISATION
PIASTRA DI FOCALIZZAZIONE
PLACA DE FOCO
TR08
29201-446 97
C07
330p-680p
12,5kV
MKT
ZUM COLOR CHASSIS
TO COLOUR CHASSIS
VERS CHASSIS DE COULEUR
AL CHASSIS COLORE
AL CHASIS COLOR
BILDROHR-PLATTE
CRT BASE
C I TUBE CATHOD
PIASTRA CINESC
PLACA-ZOCALO TRC
BR
K536
R564
100k(70/82cm)
330k(95cm)
TR651
29201-392 99(70cm/2x25W)
29201-393 99(70cm/2x40W)
29201-394 99(70cm/2x60W)
29201-395 99(82/95cm/2x60W)
31V (2x25W)
38V (2x40W)
42V (2x60W)
149V(70CM)
161V(82/87CM)
163V(95CM)
IC678
LM317
IC686
LM317
IC690
LM350
FEATURE-B
CONT 1
FEATURE-B
CONT 13/14
FEATURE-B
CONT 42/43
+12,25V
+5V
+K
+17V
-K
-17V
+C
200V
+D
26V
T661
IRF PC50
IC650
TAA765A
NUR BEI FUTABA
ONLY ON FUTABA
SEUL POUR FUTABA
SOLO CON FUTABA
SPANNUNGSVERSORGUNGSEINHEIT 29305-106 01
POWER SUPPLY UNIT
UNITE D'ALIMENTATION DE TENSION
UNITA DI ALIMENTOZIONE
UNIDAD DE ALIMENTACION DE TENSION
TR6101
29201-380 01
HZ1
HZ
-5,4V
-27V
IC555
TDA8145
TR501
09245-812 97
T572
L520
JH
TR526
29201-025 09 (70cm)
29201-025 03 (82/87cm)
29201-025 10 (95cm)
NUR B.BEDARF
ONLY IF REQUIRED
SOLO IN CASO DI NECESS
1400V
+200V
+K /17V
-K /17V
+D +26V
30V/95cm

GRUNDIG

NETZ - CHASSIS CUC 1821
CUC 1851
CUC 1881
CUC 1892

MAINS CHASSIS
CHASSIS DI SECTEUR
CHASSIS DI RETE
CHASIS INTERR RED

AENDERUNGEN VORBEHALTEN
SUBJECT TO ALTERNATE
SOURS RESERVE DE MODIFIC
CON RISERVA DI MODIFICA
RESERV EL DEREC DE MODIF

29305-079 01
121092

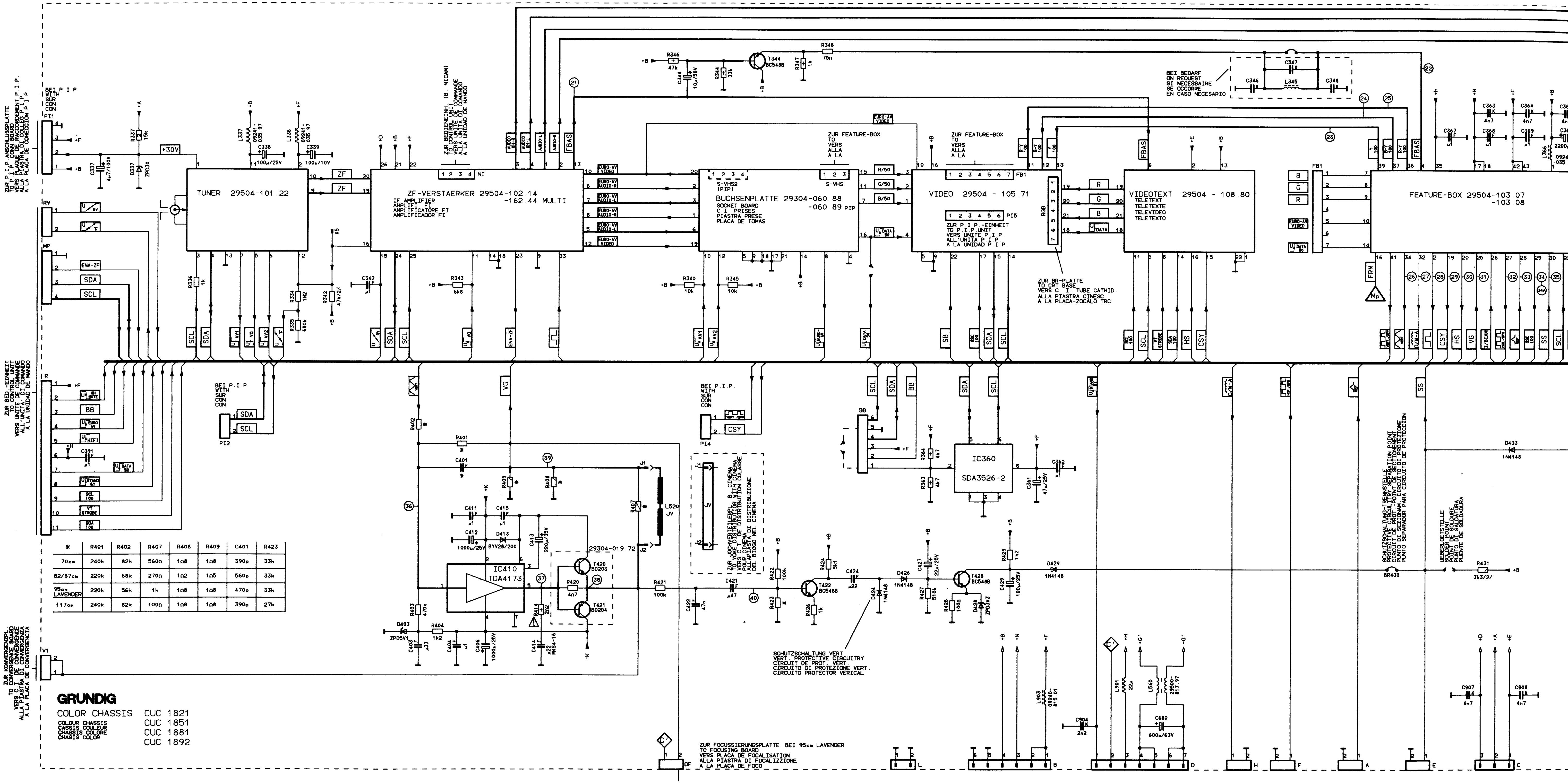
TUNER 29504-101 22
ZF-VERSTAERKER 29504-102 14 -162 44 MULTI
IF AMPLIFIER
AMPLIFI. FI
AMPLIFICATORE FI
AMPLIFICADOR FI
BUCHSENPLATTE 29304-060 88 -060 89 PIP
SOCKET BOARD
C I PRISES
PIASTRA PRESE
PLACA DE TOMAS
S-VHS2 (PIP)
S-VHS
VIDEO 29504 - 105 71
VIDEOTEXT 29504 - 108 80
TELETEXT
TELETEXTE
TELEVIDEO
TELETEXTO
FEATURE-BOX 29504-103 07 -103 08
ZUR FEATURE-BOX
TO
VERS
ALLA
A LA
ZUR P.I.P.-EINHEIT
TO P.I.P. UNIT
VERS UNITE P.I.P.
ALL'UNITA P.I.P.
A LA UNIDAD P.I.P.
ZUR BR-PLATTE
TO CRT BASE
VERS C.I. TUBE CATHID
ALLA PIASTRA CINESC.
A LA PLACA-ZOCALO TRC
ZUR BEDIENEINH. (B. NICAM)
TO CONTROL UNIT
VERS UNITE DE COMMANDE
ALLA UNITA DI COMANDO
A LA UNIDAD DE MANDO
ZUR P.I.P. ANSCHLUSSPLATTE
TO P.I.P. BOARD
VERS PLATINE DE RACCORDEMENT P.I.P.
ALLA PIASTRA DI CONNESSIONE P.I.P.
A LA PLACA DE CONEXION P.I.P.
BEI P.I.P.
WITH
SUR
CON
CON
ZUR BED.-EINHEIT
TO CONTROL UNIT
VERS UNITE DE COMMANDE
ALL'UNITA DI COMANDO
A LA UNIDAD DE MANDO
ZUR KONVERGENZPL.
TO CONVERGENCE BOARD
VERS C.I. DE CONVERGENCE
ALLA PIASTRA DI CONVERGENZA
A LA PLACA DE CONVERGENCIA
BEI BEDARF
ON REQUEST
SI NECESSAIRE
SE OCCORRE
EN CASO NECESARIO
IC410 TDA4173
29304-019 72
IC360 SDA3526-2
ZUR JOCHVERTEILERPL. B. CINEMA
TO YOKE DISTRIBUTION BOARD WITH CINEMA
VERS C.I. DE DISTRIBUTION CULASSE
ALLA PIASTRA DI DISTRIBUZIONE
SCHUTZSCHALTUNG VERT
VERT. PROTECTIVE CIRCUITRY
CIRCUIT DE PROT. VERT
CIRCUITO DI PROTEZIONE VERT
CIRCUITO PROTECTOR VERICAL
SCHUTZSCHALTUNG-TRENNSTELLE
PROTECTIVE CIRCUITRY SEPARATION POINT
LOETSTELLE
SOLDER POINT
POINT DE SOUDURE
PUNTO DI SALDATURA
PUENTE DE SOLDADURA
ZUR FOCUSSIERUNGSPLATTE BEI 95cm LAVENDER
TO FOCUSING BOARD
VERS PLACA DE FOCALISATION
ALLA PIASTRA DI FOCALIZZIONE
A LA PLACA DE FOCO
T344 BC548B
T420 BD203
T421 BD204
T422 BC548B
T428 BC548B
L520 JV
L345
L540
L901
L903
D413 BYV28/200
D403 ZPD5V1
D426 1N4148
D424 1N4148
D429 1N4148
D433 1N4148
D428 ZPD3V3
R348 75n
R346 47k
R344 33k
R347 1k
R343 6k8
R340 10k
R345 10k
R336 1k
R334 1M2
R342 47k/2/
R335 680k
R337 15k
D337 ZPD30
C337 4u7/100V
C338 100u/25V
C339 100u/10V
C344 10u/50V
C361 47u/25V
C406 1000u/25V
C413 220u/35V
C414 u22 MKS4-16
C412 1000u/25V
R421 100k
C421 u47
C422 47n
C424 u22
R424 5k1
R427 510k
R428 100k
C427 22u/25V
C429 100u/25V
R429 1k2
R431 3k3/2/
BR430
R404 1k2
R420 4n7
C682 600u/63V
C904 2n2
C907 4n7
C908 4n7
C347 4n7
+30V
ZF
SDA
SCL
BB
CSY
FBAS
EURO-AV VIDEO
EURO-AV AUDIO-R
EURO-AV AUDIO-L
R/50
G/50
B/50
R
G
B
VG
SS
HS
FRH
J1
J2
PI1
PI2
PI4
RV
MP
R
V1
DF
L
B
D
H
F
A
E
C

*	R401	R402	R407	R408	R409	C401	R423
70cm	240k	82k	560n	1n8	1n8	390p	33k
82/87cm	220k	68k	270n	1n2	1n5	560p	33k
95cm LAVENDER	220k	56k	1k	1n8	1n8	470p	33k
117cm	240k	82k	100n	1n8	1n8	390p	27k

GRUNDIG

COLOR CHASSIS CUC 1821
COLOUR CHASSIS CUC 1851
CASSIS COULEUR CUC 1881
CHASSIS COLORE CUC 1892
CHASIS COLOR

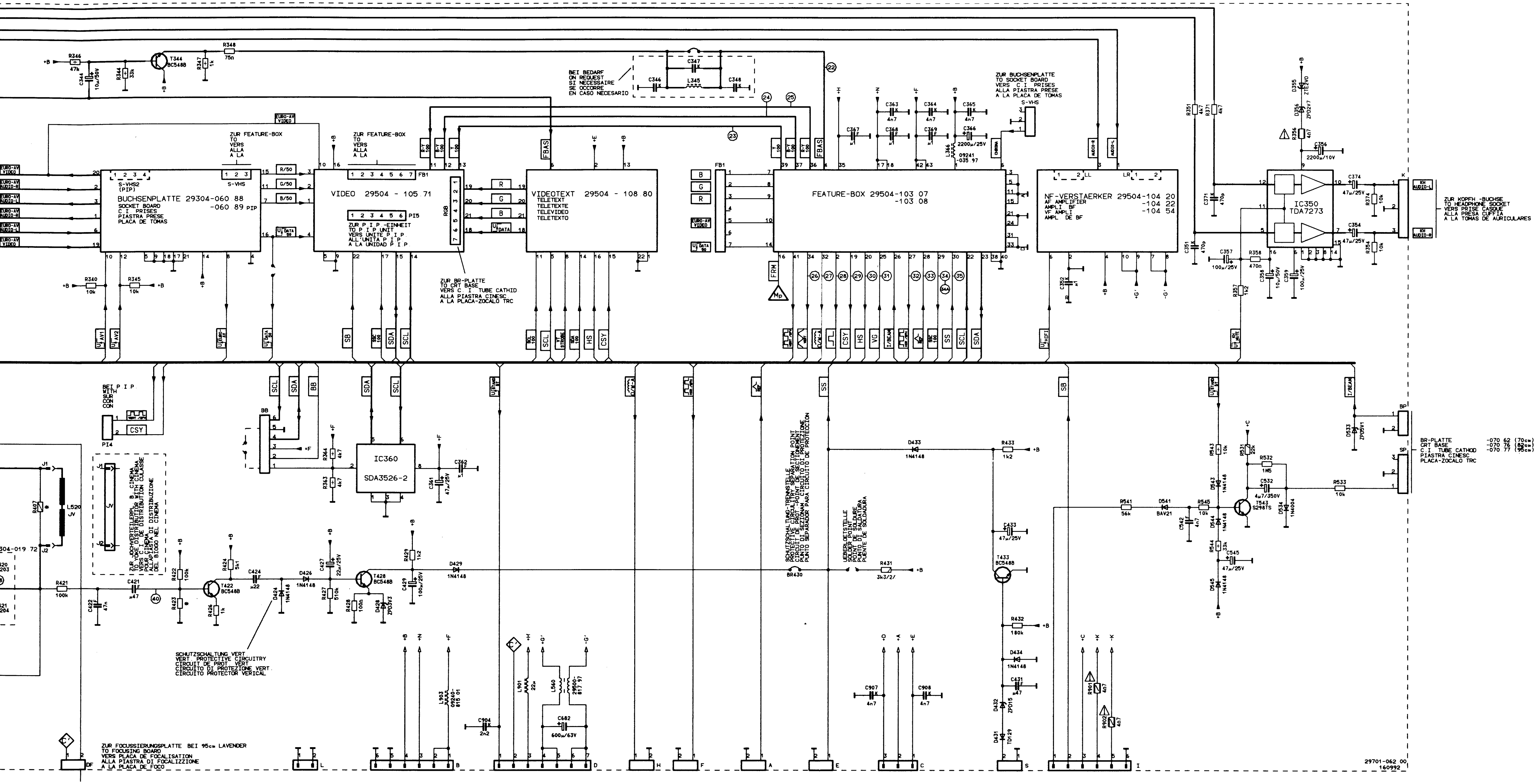
BUCHSENPLATTE 29304-060 88
-060 89 PIP
SOCKET BOARD
C I PRISES
PIASTRA PRESE
PLACA DE TOMAS
S-VHS2 (PIP)
S-VHS
ZUR FEATURE-BOX
TO
VERS
ALLA
A LA
VIDEO 29504 - 105 71
ZUR P I P -EINHEIT
TO P I P UNIT
VERS UNITE P I P
ALL'UNITA P I P
A LA UNIDAD P I P
ZUR BR-PLATTE
TO CRT BASE
VERS C I TUBE CATHOD
ALLA PIASTRA CINESC
A LA PLACA-ZOCALO TRC
VIDEOTEXT 29504 - 108 80
TELETEXT
TELETEXTE
TELEVIDEO
TELETEXTO
BEI BEDARF
ON REQUEST
SI NECESSAIRE
SE OCCORRE
EN CASO NECESARIO
FEATURE-BOX 29504-103 07
-103 08
ZUR BUCHSENPLATTE
TO SOCKET BOARD
VERS C I PRISES
ALLA PIASTRA PRESE
A LA PLACA DE TOMAS
NF-VERSTAERKER 29504-104 20
-104 22
-104 54
AF AMPLIFIER
AMPLI BF
VF AMPLI
AMPL DE BF
IC350
TDA7273
ZUR KOPFH -BUCHSE
TO HEADPHONE SOCKET
VERS PRISE CASQUE
ALLA PRESA CUFFIA
A LA TOMAS DE AURICULARES
BEI P I P
WITH
SUR
CON
CON
IC360
SDA3526-2
BR-PLATTE
CRT BASE
C I TUBE CATHOD
PIASTRA CINESC
PLACA-ZOCALO TRC
-070 62 (70cm)
-070 76 (82cm)
-070 77 (95cm)
SCHUTZSCHALTUNG TRENNSTELLE
PROTECTIVE CIRCUITRY SEPARATION POINT
POINT DE SEPARATION DU CIRCUIT DE PROTECTION
PUNTO DI SEZIONAM. CIRCUITO DI PROTEZIONE
PUNTO SEPARADOR PARA CIRCUITO DE PROTECCION
UEBERLOETSTELLE
SOLDER POINT
POINT DE SOUDURE
PUNTO DI SALDATURA
PUENTE DE SOLDADURA
SCHUTZSCHALTUNG VERT
VERT. PROTECTIVE CIRCUITRY
CIRCUIT DE PROT. VERT
CIRCUITO DI PROTEZIONE VERT
CIRCUITO PROTECTOR VERICAL
ZUR FOCUSSIERUNGSPLATTE BEI 95cm LAVENDER
TO FOCUSSING BOARD
VERS PLACA DE FOCALISATION
ALLA PIASTRA DI FOCALIZZIONE
A LA PLACA DE FOCO
T344 BC548B
R346 47k
R344 33k
R347 1k
R348 75n
C344 10µ/50V
L345
C346
C347
C348
R340 10k
R345 10k
R343 4k7
R364 4k7
C361 47µ/25V
C362
T422 BC548B
T428 BC548B
R421 100k
C421 µ47
C422 47n
R422 100k
R424 5k1
C424 µ22
D426 1N4148
D424 1N4148
C427 22µ/25V
R427 510k
R426 1k
R428 100n
D428 ZPD3V3
R429 1k2
C429 100µ/25V
D429 1N4148
BR430
R431 3k3/2/
D433 1N4148
R433 1k2
C433 47µ/25V
T433 BC548B
R432 180k
D434 1N4148
C431 µ47
D432 ZPD15
D431 TD129
C907 4n7
C908 4n7
R901 4k7
R902 4k7
L901 22µ
L903 09240-616 01
L560 29500-617 97
C682 600µ/63V
C904 2n2
R541 56k
D541 BAV21
R545 10k
C542 4n7
T543 S2987S
D534 1N4004
R531 22k
R532 1M5
C532 4µ7/350V
R533 10k
R543 10k
D543 1N4148
D544 1N4148
R544 33k
C545 47µ/25V
D545 1N4148
D533 ZPD91
R351 4k7
R371 4k7
C371 470p
C351 470p
C357 100µ/25V
R358 470n
C358 10µ/50V
C359 100µ/25V
R357 1k2
C374 47µ/25V
R374 10k
C354 47µ/25V
R354 10k
D355 ZTE20V
D356 ZPD2V7
R356 4k7
C356 2200µ/10V
C363 4n7
C364 4n7
C365 4n7
C366 2200µ/25V
C367
C368
C369
L366 09241-035 97
C352
L520
R407
J1
J2
JV
PI4
PI5
FB1
B8
CSY
SCL
SDA
SB
HS
VG
SS
FRM
FBAS
CHROMA
R
G
B
R/50
G/50
B/50
EURO-AV VIDEO
EURO-AV AUDIO-R
EURO-AV AUDIO-L
KH AUDIO-L
KH AUDIO-R
BP
SP
DF
L
B
D
H
F
A
E
C
S
I
K
29701-062 00
160992

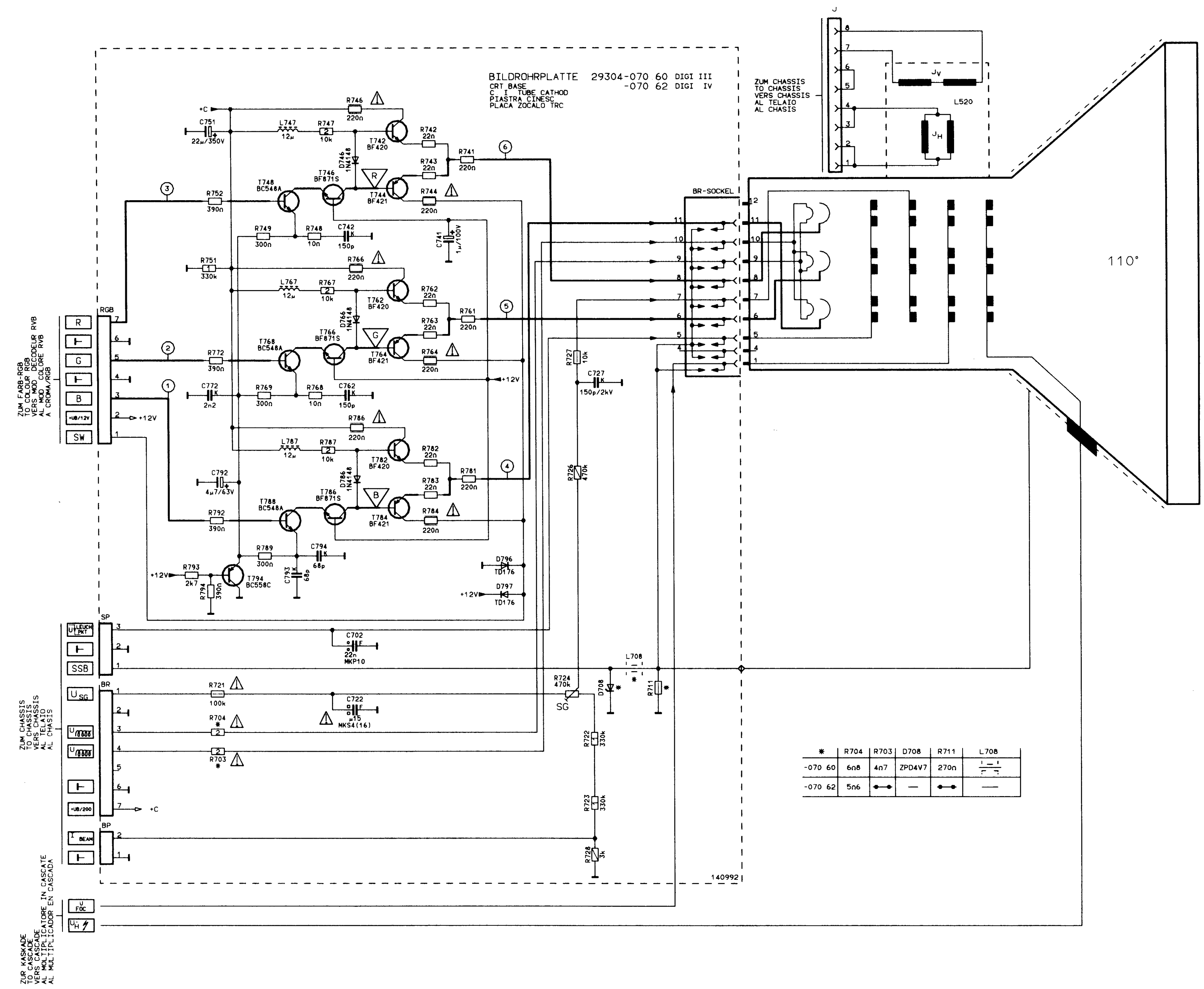
BILDROHRPLATTE 29304-070 60 DIGI III
-070 62 DIGI IV
CRT BASE
C. I. TUBE CATHOD
PIASTRA CINESC
PLACA ZOCALO TRC
ZUM CHASSIS
TO CHASSIS
VERS CHASSIS
AL TELAIO
AL CHASIS
J
JV
JH
L520
BR-SOCKEL
110°
ZUM FARB-RGB
TO COLOUR RGB
VERS MOD. DECODEUR RVB
AL MOD. COLORE RVB
A CROMA/RGB
RGB
R
G
B
SW
+12V
SP
SSB
BR
BP
+C
ZUR KASKADE
TO CASCADE
VERS CASCADE
AL MOLTIPLICATORE IN CASCADE
AL MULTIPLICADOR EN CASCADA
UFOC
UH
C751 22µ/350V
L747 12µ
R747 10k
R746 220n
T742 BF420
R742 22n
R743 22n
R741 220n
R744 220n
T744 BF421
T746 BF871S
T748 BC548A
D746 1N4148
R752 390n
R749 300n
R748 10n
C742 150p
C741 1µ/100V
R751 330k
R766 220n
L767 12µ
R767 10k
T762 BF420
R762 22n
R763 22n
R761 220n
R764 220n
T764 BF421
T766 BF871S
T768 BC548A
D766 1N4148
R772 390n
C772 2n2
R769 300n
R768 10n
C762 150p
R786 220n
L787 12µ
R787 10k
T782 BF420
R782 22n
R783 22n
R781 220n
R784 220n
T784 BF421
T786 BF871S
T788 BC548A
D786 1N4148
C792 4µ7/63V
R792 390n
R789 300n
C794 68p
C793 68p
R793 2k7
R794 390n
T794 BC558C
D796 TD176
D797 TD176
R727 10k
C727 150p/2kV
R726 470k
C702 22n MKP10
R721 100k
R704
R703
C722 15 MKS4(16)
R724 470k
SG
D708
R711
L708
R722 330k
R723 330k
R728 1k
140992

✱	R704	R703	D708	R711	L708
-070 60	6n8	4n7	ZPD4V7	270n	
-070 62	5n6	●—●	—	●—●	—

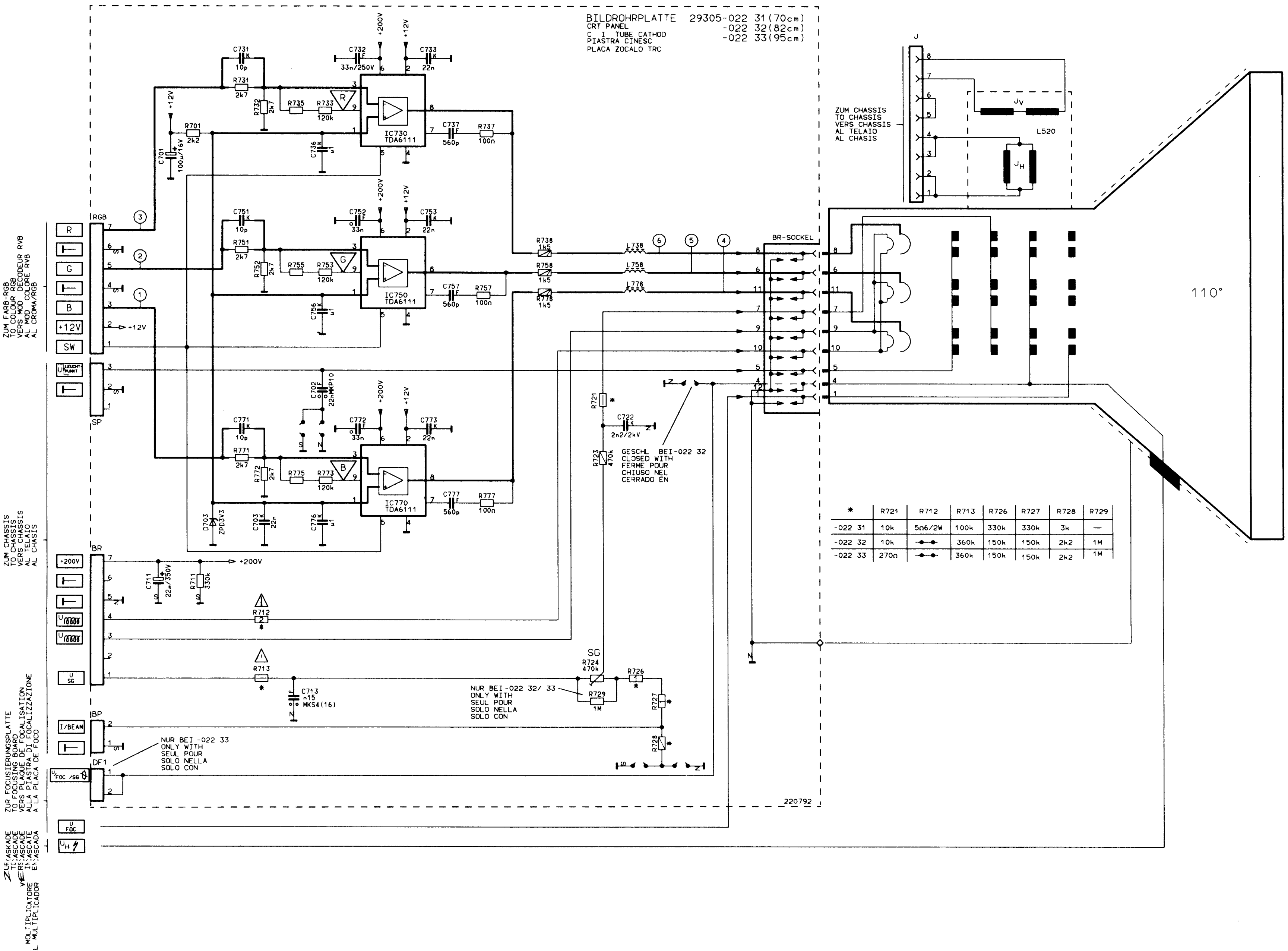
BILDROHRPLATTE 29305-022 31(70cm)
-022 32(82cm)
-022 33(95cm)
CRT PANEL
C. I. TUBE CATHOD
PIASTRA CINESC
PLACA ZOCALO TRC
ZUM CHASSIS
TO CHASSIS
VERS CHASSIS
AL TELAIO
AL CHASIS
J
JV
JH
L520
BR-SOCKEL
110°
ZUM FARB-RGB
TO COLOUR RGB
VERS MOD. DECODEUR RVB
AL MOD. COLORE RVB
A CROMA/RGB
RGB
R
G
B
+12V
SW
SP
BR
+200V
BP
I/BEAM
DF1
UFOC/UG
ZUR FOCUSSIERUNGSPLATTE
TO FOCUSING BOARD
VERS PLAQUE DE FOCALISATION
ALLA PIASTRA DI FOCALIZZAZIONE
A LA PLACA DE FOCO
ZUR KASKADE
TO CASCADE
VERS CASCADE
AL MOLTIPLICATORE IN CASCADE
AL MULTIPLICADOR EN CASCADA
UFOC
UH
C731 10p
R731 2k7
R732 2k7
R735
R733 120k
C732 33n/250V
C733 22n
IC730 TDA6111
C737 560p
R737 100n
R701 2k2
C701 100µ/16V
C736
C751 10p
R751 2k7
R752 2k7
R755
R753 120k
C752 33n
C753 22n
IC750 TDA6111
C757 560p
R757 100n
C756
R738 1k5
R758 1k5
R778 1k5
L738
L758
L778
C702 22n MKP10
C771 10p
R771 2k7
R772 2k7
R775
R773 120k
C772 33n
C773 22n
IC770 TDA6111
C777 560p
R777 100n
D703 ZPD5V1
C703 22n
C776
C711 22µ/350V
R711 330k
R712
R713
C713 15 MKS4(16)
R721
C722 2n2/2kV
R723 470k
GESCHL. BEI-022 32
CLOSED WITH
FERME POUR
CHIUSO NEL
CERRADO EN
SG
R724 470k
R726
R727
R728
R729 1M
NUR BEI-022 32/ 33
ONLY WITH
SEUL POUR
SOLO NELLA
SOLO CON
NUR BEI -022 33
ONLY WITH
SEUL POUR
SOLO NELLA
SOLO CON
220792

✱	R721	R712	R713	R726	R727	R728	R729
-022 31	10k	5n6/2W	100k	330k	330k	3k	—
-022 32	10k	●—●	360k	150k	150k	2k2	1M
-022 33	270n	●—●	360k	150k	150k	2k2	1M

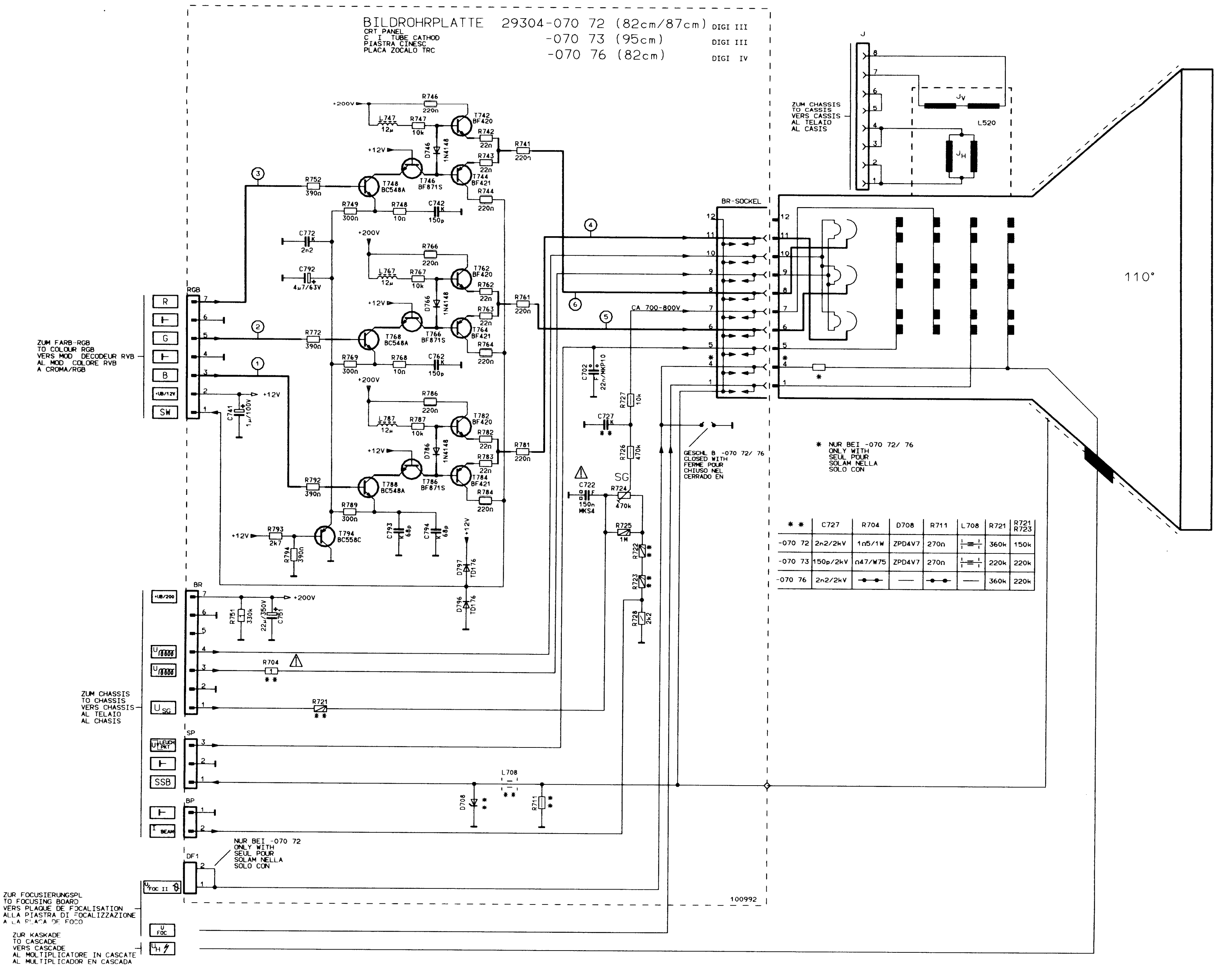

BILDROHRPLATTE 29304-070 72 (82cm/87cm) DIGI III
-070 73 (95cm) DIGI III
-070 76 (82cm) DIGI IV
CRT PANEL
C I TUBE CATHOD
PIASTRA CINESC
PLACA ZOCALO TRC

ZUM FARB-RGB
TO COLOUR RGB
VERS MOD DECODEUR RVB
AL MOD COLORE RVB
A CROMA/RGB
R
G
B
+UB/12V
SW
RGB
ZUM CHASSIS
TO CHASSIS
VERS CHASSIS
AL TELAIO
AL CHASIS
+UB/200
U_SG
BR
SP
U LEUCH PKT
SSB
BP
I BEAM
DF1
NUR BEI -070 72
ONLY WITH
SEUL POUR
SOLAM NELLA
SOLO CON
ZUR FOCUSIERUNGSPL
TO FOCUSING BOARD
VERS PLAQUE DE FOCALISATION
ALLA PIASTRA DI FOCALIZZAZIONE
A LA PLACA DE FOCO
U/FOC II
U FOC
ZUR KASKADE
TO CASCADE
VERS CASCADE
AL MOLTIPLICATORE IN CASCATE
AL MULTIPLICADOR EN CASCADA
U_H
+200V
+12V
T742 BF420
T744 BF421
T746 BF871S
T748 BC548A
T762 BF420
T764 BF421
T766 BF871S
T768 BC548A
T782 BF420
T784 BF421
T786 BF871S
T788 BC548A
T794 BC558C
D746 1N4148
D766 1N4148
D786 1N4148
D797 TD176
D796 TD176
L747 12µ
L767 12µ
L787 12µ
R746 220n
R747 10k
R742 22n
R743 22n
R741 220n
R744 220n
R752 390n
R749 300n
R748 10n
C742 150p
C772 2n2
C792 4µ7/63V
R766 220n
R767 10k
R762 22n
R763 22n
R761 220n
R764 220n
R772 390n
R769 300n
R768 10n
C762 150p
R786 220n
R787 10k
R782 22n
R783 22n
R781 220n
R784 220n
R792 390n
R789 300n
R793 2k7
R794 390n
C793 68p
C794 68p
C741 1µ/100V
R751 330k
C751 22µ/350V
R704
R721
L708
D708
R711
C702 22n/MKP10
R727 10k
C727
R726 470k
C722 150n MKS4
SG
R724 470k
R725 1M
R722
R723
R728 2k2
CA 700-800V
GESCHL B -070 72/ 76
CLOSED WITH
FERME POUR
CHIUSO NEL
CERRADO EN
BR-SOCKEL
ZUM CHASSIS
TO CASSIS
VERS CASSIS
AL TELAIO
AL CASIS
J
J_V
J_H
L520
110°
* NUR BEI -070 72/ 76
ONLY WITH
SEUL POUR
SOLAM NELLA
SOLO CON
100992

* *	C727	R704	D708	R711	L708	R721	R721 R723
-070 72	2n2/2kV	1n5/1W	ZPD4V7	270n	╪	360k	150k
-070 73	150p/2kV	n47/W75	ZPD4V7	270n	╪	220k	220k
-070 76	2n2/2kV	●–●	—	●–●	—	360k	220k

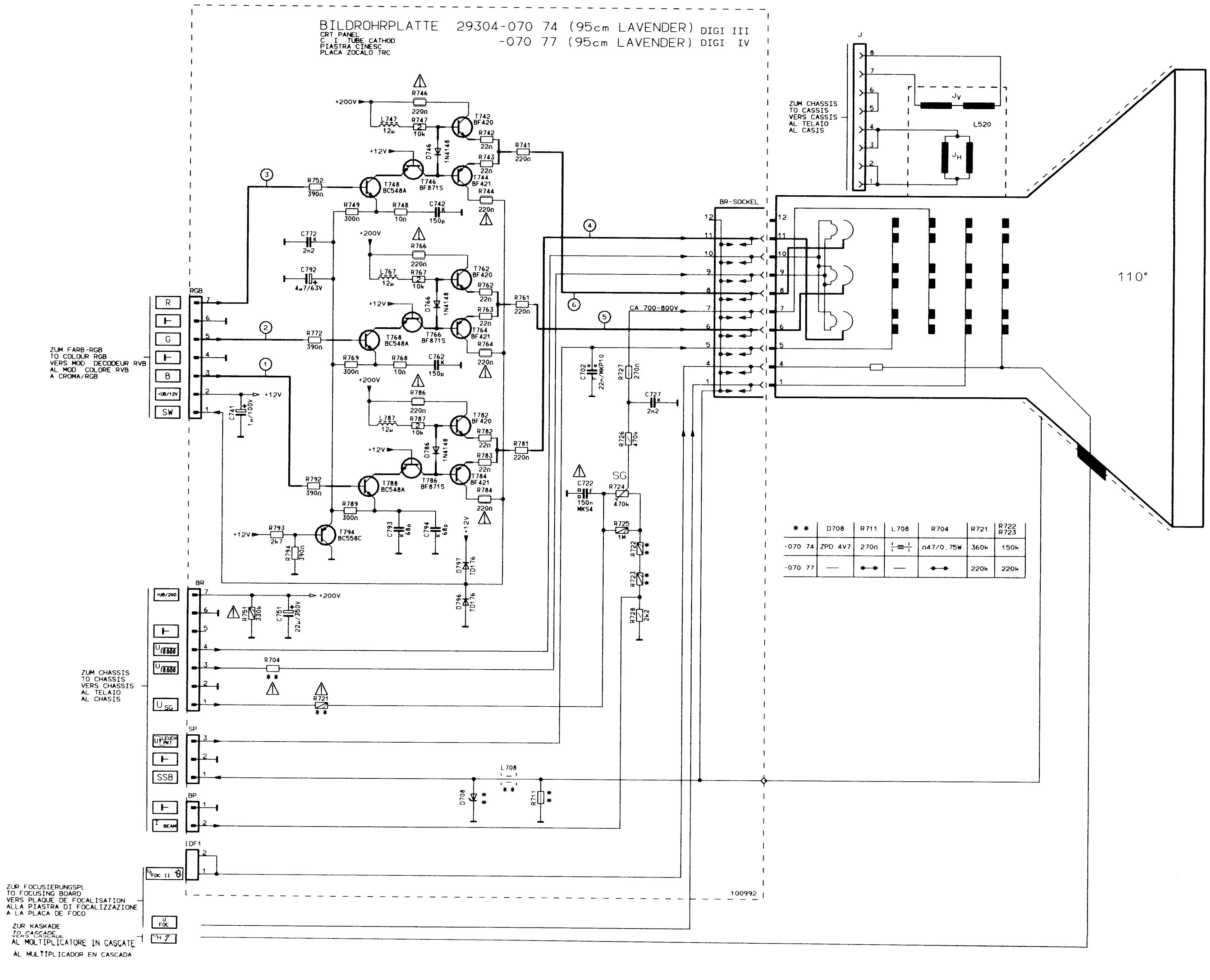

BILDROHRPLATTE 29304-070 74 (95cm LAVENDER) DIGI III
-070 77 (95cm LAVENDER) DIGI IV
CRT PANEL
C I TUBE CATHOD
PIASTRA CINESC
PLACA ZOCALO TRC

ZUM FARB-RGB
TO COLOUR RGB
VERS MOD DECODEUR RVB
AL MOD COLORE RVB
A CROMA/RGB
R
G
B
+UB/12V
SW
RGB
ZUM CHASSIS
TO CHASSIS
VERS CHASSIS
AL TELAIO
AL CHASIS
+UB/200
U_SG
BR
SP
SSB
BP
I BEAM
DF1
ZUR FOCUSIERUNGSPL
TO FOCUSING BOARD
VERS PLAQUE DE FOCALISATION
ALLA PIASTRA DI FOCALIZZAZIONE
A LA PLACA DE FOCO
U/FOC II
U FOC
ZUR KASKADE
TO CASCADE
AL MOLTIPLICATORE IN CASCATE
AL MULTIPLICADOR EN CASCADA
+200V
+12V
T742 BF420
T744 BF421
T746 BF871S
T748 BC548A
T762 BF420
T764 BF421
T766 BF871S
T768 BC548A
T782 BF420
T784 BF421
T786 BF871S
T788 BC548A
T794 BC558C
R746 220n
R747 10k
R741 220n
R752 390n
R772 390n
R792 390n
R761 220n
R781 220n
C702 22n/MKP10
R727 270n
C727 2n2
R726 470k
C722 150n MKS4
SG
R724 470k
R725 1M
R728 2k2
CA 700-800V
BR-SOCKEL
ZUM CHASSIS
TO CASSIS
VERS CASSIS
AL TELAIO
AL CASIS
J
J_V
J_H
L520
110°
100992

* *	D708	R711	L708	R704	R721	R722 R723
-070 74	ZPD 4V7	270n	╪	n47/0,75W	360k	150k
-070 77	—	●–●	—	●–●	220k	220k

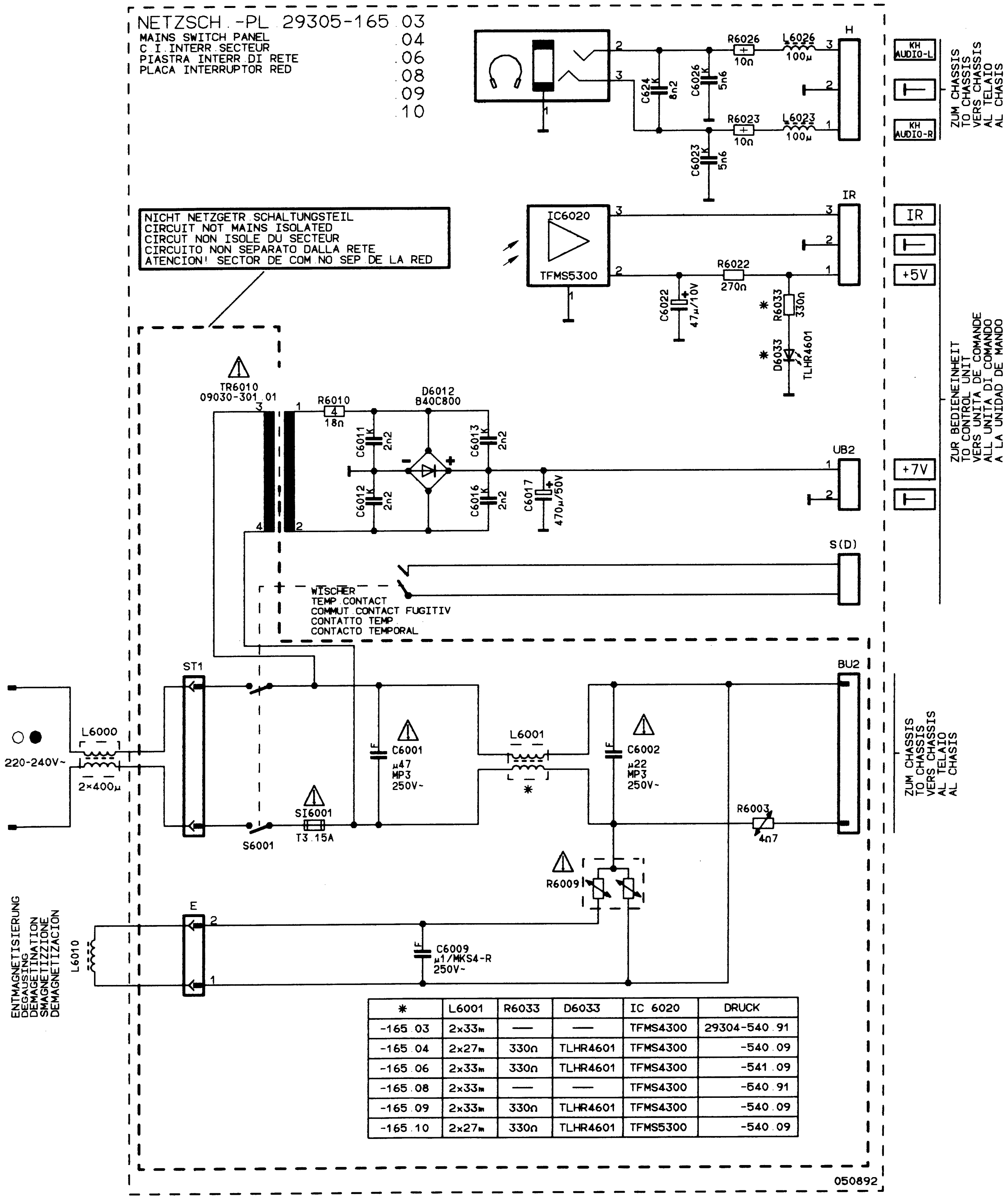
KH AUDIO-L
KH AUDIO-R
R6026 10n
L6026 100µ
C624 8n2
C6026 5n6
R6023 10n
L6023 100µ
C6023 5n6
H
ZUM CHASSIS
TO CHASSIS
VERS CHASSIS
AL TELAIO
AL CHASIS
IC6020
TFMS5300
IR
+5V
R6022 270n
C6022 47µ/10V
R6033 330n
D6033 TLHR4601
ZUR BEDIENEINHEIT
TO CONTROL UNIT
VERS UNITA DE COMANDE
A LA UNITA DI COMANDO
A LA UNIDAD DE MANDO
TR6010 09030-301.01
R6010 18n
D6012 B40C800
C6011 2n2
C6012 2n2
C6013 2n2
C6016 2n2
C6017 470µ/50V
UB2
+7V
S(D)
WISCHER
TEMP CONTACT
COMMUT CONTACT FUGITIV
CONTATTO TEMP
CONTACTO TEMPORAL
ST1
BU2
L6000 2×400µ
220-240V~
C6001 µ47 MP3 250V~
L6001
C6002 µ22 MP3 250V~
R6003 4n7
SI6001 T3.15A
S6001
R6009
E
L6010
ENTMAGNETISIERUNG
DEGAUSSING
DEMAGNETINATION
SMAGNETIZZIONE
DEMAGNETIZACION
C6009 µ1/MKS4-R 250V~
050892

NETZSCH.-PL 29305-165 03
.04
.06
.08
.09
.10

MAINS SWITCH PANEL
C.I. INTERR.SECTEUR
PIASTRA INTERR.DI RETE
PLACA INTERRUPTOR RED

NICHT NETZGETR.SCHALTUNGSTEIL
CIRCUIT NOT MAINS ISOLATED
CIRCUT NON ISOLE DU SECTEUR
CIRCUITO NON SEPARATO DALLA RETE
ATENCION! SECTOR DE COM NO SEP DE LA RED

*	L6001	R6033	D6033	IC 6020	DRUCK
-165.03	2x33m	—	—	TFMS4300	29304-540.91
-165.04	2x27m	330n	TLHR4601	TFMS4300	-540.09
-165.06	2x33m	330n	TLHR4601	TFMS4300	-541.09
-165.08	2x33m	—	—	TFMS4300	-540.91
-165.09	2x33m	330n	TLHR4601	TFMS4300	-540.09
-165.10	2x27m	330n	TLHR4601	TFMS5300	-540.09

	CHASSIS	GERAETE
-165.03	DIG IV	M 70-791
-165.04	DIG IV	M 82/95-102
-165.06	CUC 7800	ST 82/95-775
-165.08	CUC 7800	M 70-790
-165.09	CUC 7800	FS 247 V6 (70 cm)
-165.10	DIG IV	FS 248 M6 (82 cm)

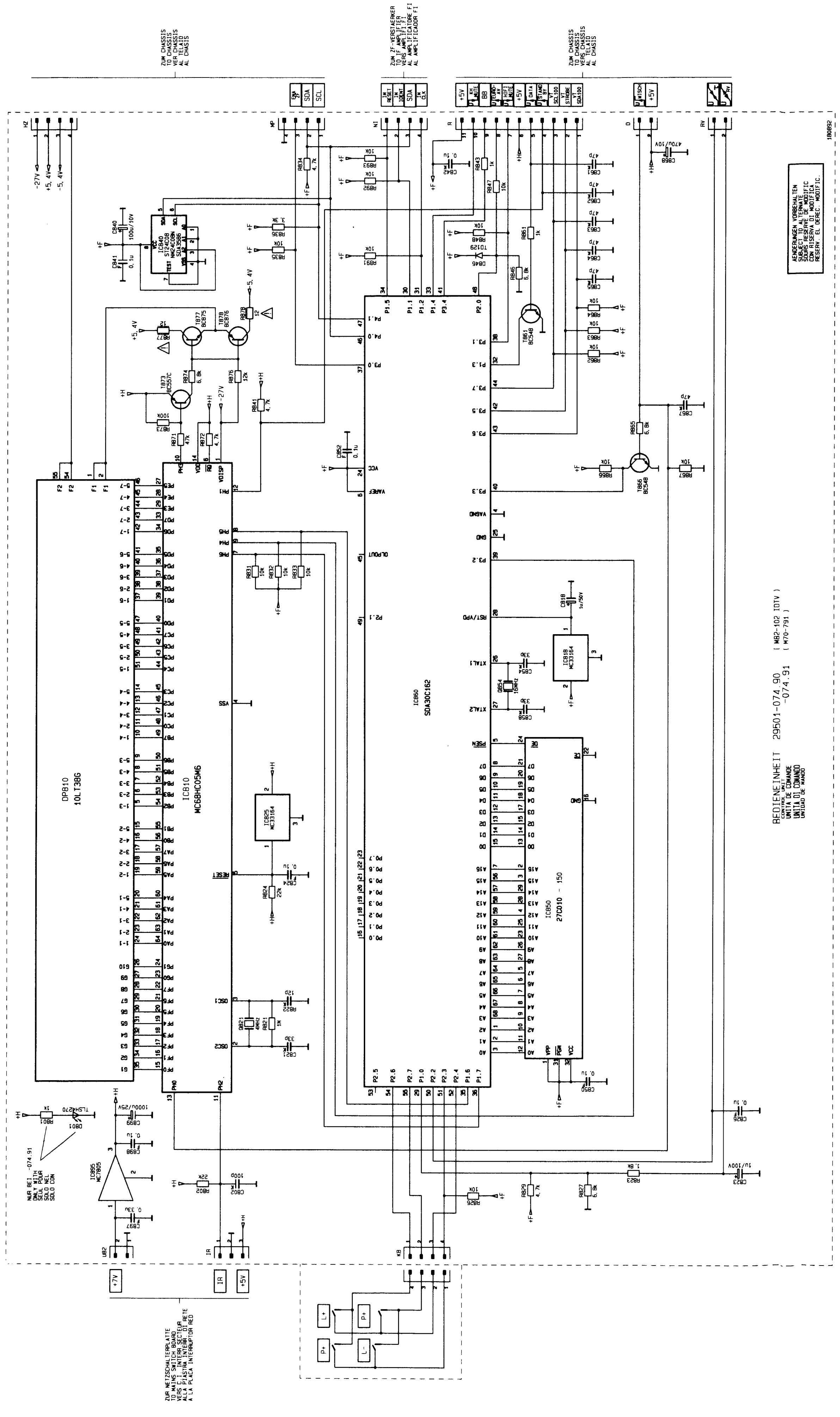
ZUM CHASSIS
TO CHASSIS
VERS CHASSIS
AL TELAIO
AL CHASIS
ZUM ZF-VERSTAERKER
TO IF AMPLIFIER
DP810 10LT386
IC810 MC68HC05M6
IC850 SDA30C162
IC825 MC33164
IC818 MC33164
27C010-150
IC895 MC7805
+7V
IR
+5V
ZUR NETZSCHALTPLATTE
TO MAINS SWITCH BOARD
C.I. INTERR.SECTEUR
A LA PIASTRA INTERR.DI RETE
A LA PLACA INTERRUPTOR RED
AENDERUNGEN VORBEHALTEN

BEDIENEINHEIT 29501-074.90 (M82-102 IDTV)
-074.91 (M70-791)
CONTROL UNIT
UNITA DE COMANDE
UNITA DI COMANDO
UNIDAD DE MANDO

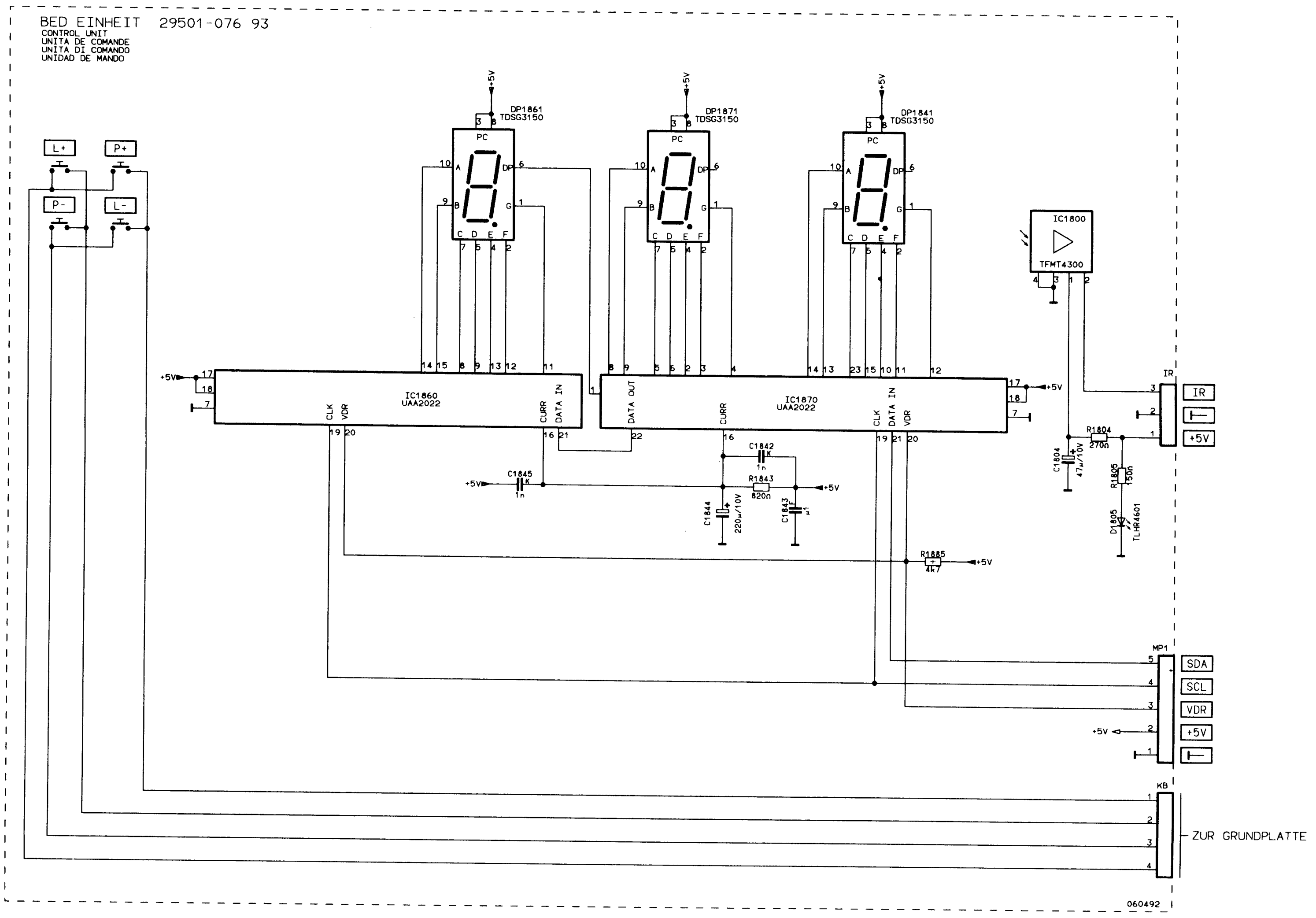
BED EINHEIT 29501-076 93
CONTROL UNIT
UNITA DE COMANDE
UNITA DI COMANDO
UNIDAD DE MANDO
L+
P+
P-
L-
+5V
DP1861
TDSG3150
DP1871
TDSG3150
DP1841
TDSG3150
PC
A
B
C
D
E
F
G
DP
IC1860
UAA2022
CLK
VDR
CURR
DATA IN
IC1870
UAA2022
DATA OUT
CURR
CLK
DATA IN
VDR
C1845
1n
C1842
1n
R1843
820n
C1844
220µ/10V
C1843
µ1
R1885
4k7
IC1800
TFMT4300
R1804
270n
C1804
47µ/10V
R1805
150n
D1805
TLHR4601
IR
IR
+5V
MP1
SDA
SCL
VDR
+5V
KB
ZUR GRUNDPLATTE
060492

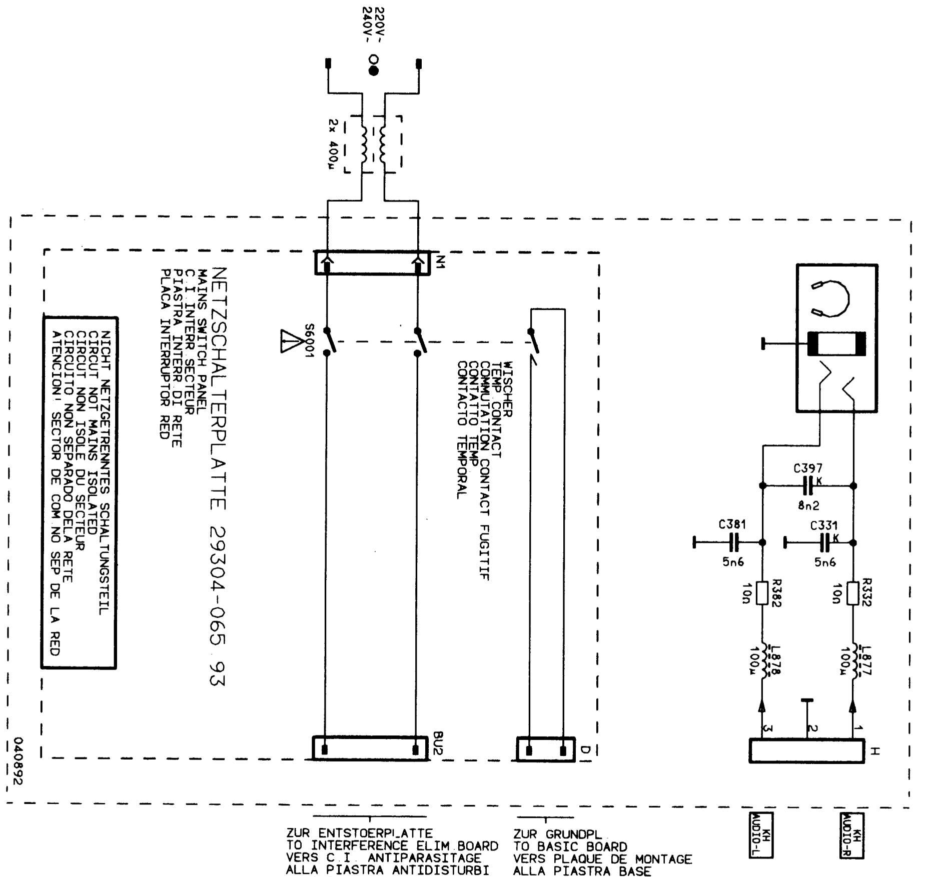
220V-
240V-
2x 400µ
N1
S6001
NETZSCHALTERPLATTE 29304-065 93
MAINS SWITCH PANEL
C.I. INTERR SECTEUR
PIASTRA INTERR DI RETE
PLACA INTERRUPTOR RED
NICHT NETZGETRENNTES SCHALTUNGSTEIL
CIRCUIT NOT MAINS ISOLATED
CIRCUT NON ISOLE DU SECTEUR
CIRCUITO NON SEPARADO DELA RETE
ATENCION! SECTOR DE COM NO SEP DE LA RED
WISCHER
TEMP CONTACT
COMMUTATION CONTACT FUGITIF
CONTATTO TEMP
CONTACTO TEMPORAL
BU2
D
C397
8n2
C381
5n6
C331
5n6
R382
10n
R332
10n
L878
100µ
L877
100µ
H
040892
ZUR ENTSTOERPLATTE
TO INTERFERENCE ELIM BOARD
VERS C.I. ANTIPARASITAGE
ALLA PIASTRA ANTIDISTURBI
A LA PLACA ANTIPARASITA
ZUR GRUNDPL
TO BASIC BOARD
VERS PLAQUE DE MONTAGE
ALLA PIASTRA BASE
A LA PLACA DE MONTAGE
KH AUDIO-L
KH AUDIO-R

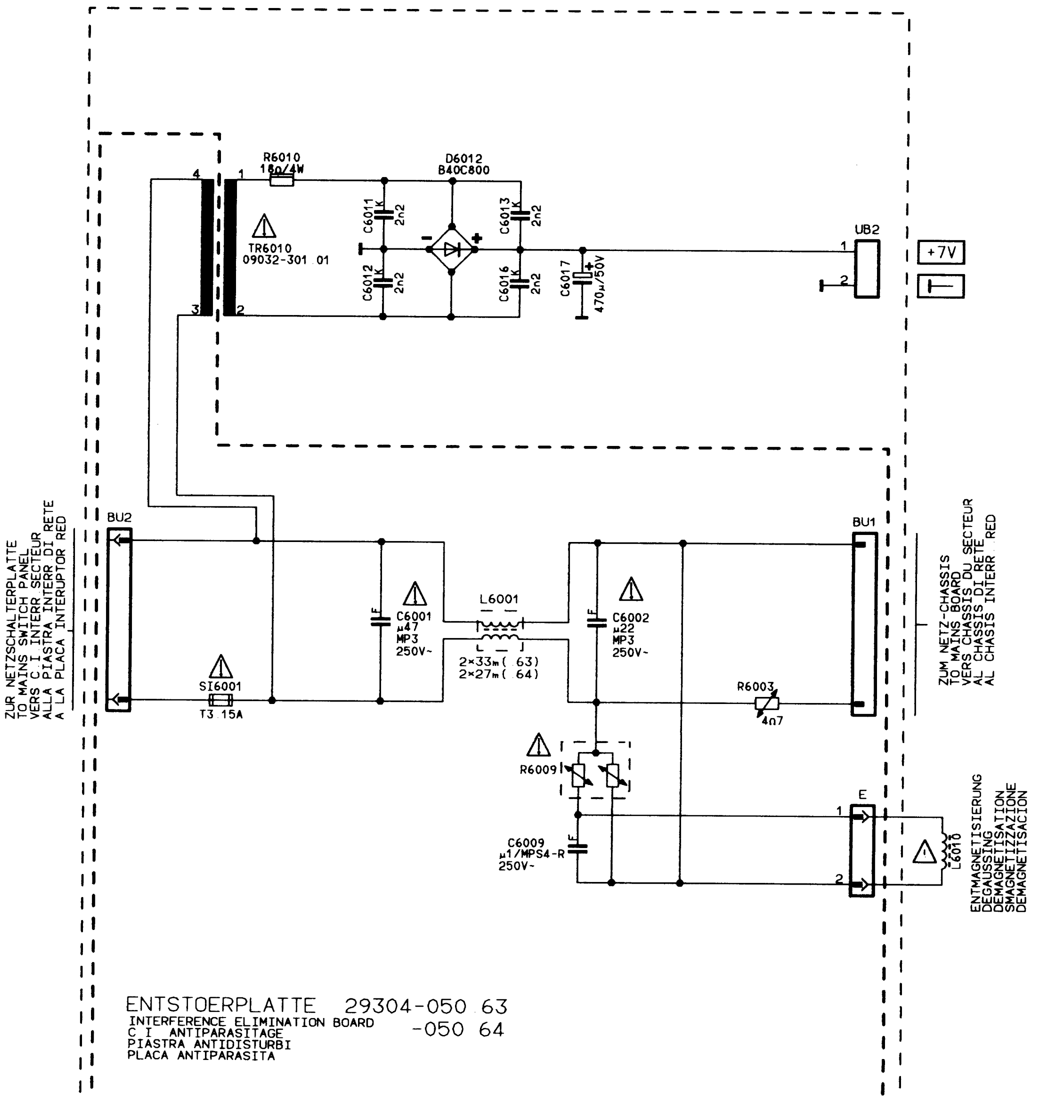
R6010
18Ω/4W
D6012
B40C800
TR6010
09032-301 01
C6011
2n2
C6012
2n2
C6013
2n2
C6016
2n2
C6017
470µ/50V
UB2
+7V
ZUR NETZSCHALTERPLATTE
TO MAINS SWITCH PANEL
VERS C.I. INTERR SECTEUR
ALLA PIASTRA INTERR DI RETE
A LA PLACA INTERUPTOR RED
BU2
SI6001
T3.15A
C6001
µ47
MP3
250V~
L6001
2×33m(.63)
2×27m(.64)
C6002
µ22
MP3
250V~
R6003
4Ω7
BU1
ZUM NETZ-CHASSIS
TO MAINS BOARD
VERS CHASSIS DU SECTEUR
AL CHASSIS DI RETE
AL CHASIS INTERR RED
R6009
C6009
µ1/MPS4-R
250V~
E
L6010
ENTMAGNETISIERUNG
DEGAUSSING
DEMAGNETISATION
SMAGNETIZZAZIONE
DEMAGNETISACION
ENTSTOERPLATTE 29304-050 63
-050 64
INTERFERENCE ELIMINATION BOARD
C.I. ANTIPARASITAGE
PIASTRA ANTIDISTURBI
PLACA ANTIPARASITA
NICHT NETZGETR SCHALTUNGSTEIL
CIRCUIT NOT MAINS ISOLATED
CIRCUT NON ISOLE DU SECTEUR
CIRCUITO NON SEPARATO DALLA RETE
ATENCION! SECTOR DE COM NO SEP DE LA RED
050892

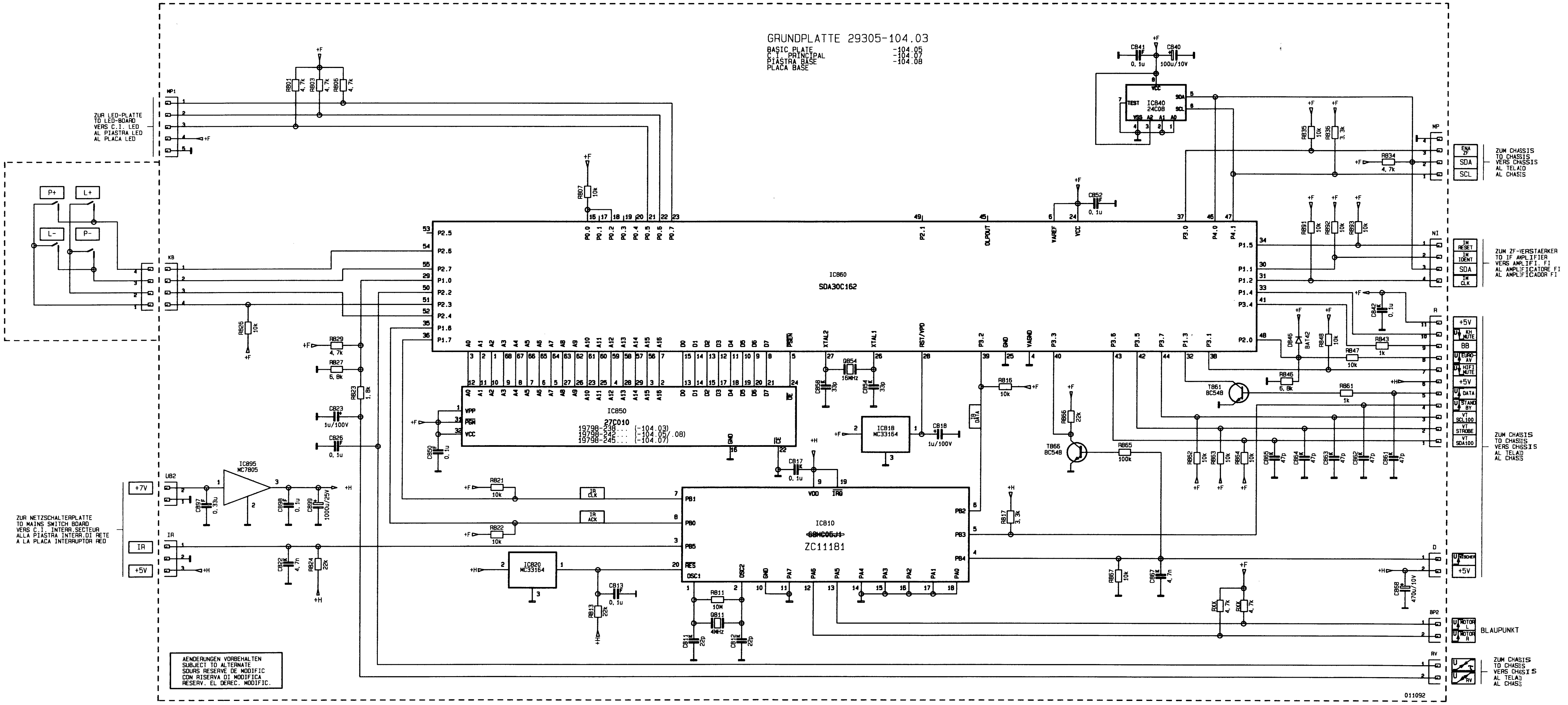
GRUNDPLATTE 29305-104.03
BASIC PLATE -104.05
C.I. PRINCIPAL -104.07
PIASTRA BASE -104.08
PLACA BASE
ZUR LED-PLATTE
TO LED-BOARD
VERS C.I. LED
AL PIASTRA LED
AL PLACA LED
MP1
KB
P+
L+
L-
P-
ZUR NETZSCHALTERPLATTE
TO MAINS SWITCH BOARD
VERS C.I. INTERR.SECTEUR
ALLA PIASTRA INTERR.DI RETE
A LA PLACA INTERRUPTOR RED
UB2
+7V
IR
+5V
IC895
MC7805
IC860
SDA30C162
IC850
27C010
19798-238... (-104.03)
19798-242... (-104.05/.08)
19798-245... (-104.07)
IC810
~~68HC05J1~~
ZC11181
IC840
24C08
IC818
MC33164
IC820
MC33164
T861
BC548
T865
BC548
Q854
16MHz
Q811
4MHz
IR CLK
IR ACK
IR DATA
MP
ENA ZF
SDA
SCL
ZUM CHASSIS
TO CHASSIS
VERS CHASSIS
AL TELAIO
AL CHASIS
NI
IM RESET
IM IDENT
SDA
IM CLK
ZUM ZF-VERSTAERKER
TO IF AMPLIFIER
VERS AMPLIFI. FI
AL AMPLIFICATORE FI
AL AMPLIFICADOR FI
R
+5V
KH MUTE
BB
EURO AV
HIFI MUTE
+5V
DATA
STAND BY
VT SCL100
VT STROBE
VT SDA100
ZUM CHASSIS
TO CHASSIS
VERS CHASSIS
AL TELAIO
AL CHASIS
D
WISCHER
+5V
BP2
MOTOR L
MOTOR R
BLAUPUNKT
RV
ZUM CHASSIS
TO CHASSIS
VERS CHASSIS
AL TELAIO
AL CHASIS
011092

AENDERUNGEN VORBEHALTEN
SUBJECT TO ALTERNATE
SOURS RESERVE DE MODIFIC
CON RISERVA DI MODIFICA
RESERV. EL DEREC. MODIFIC.

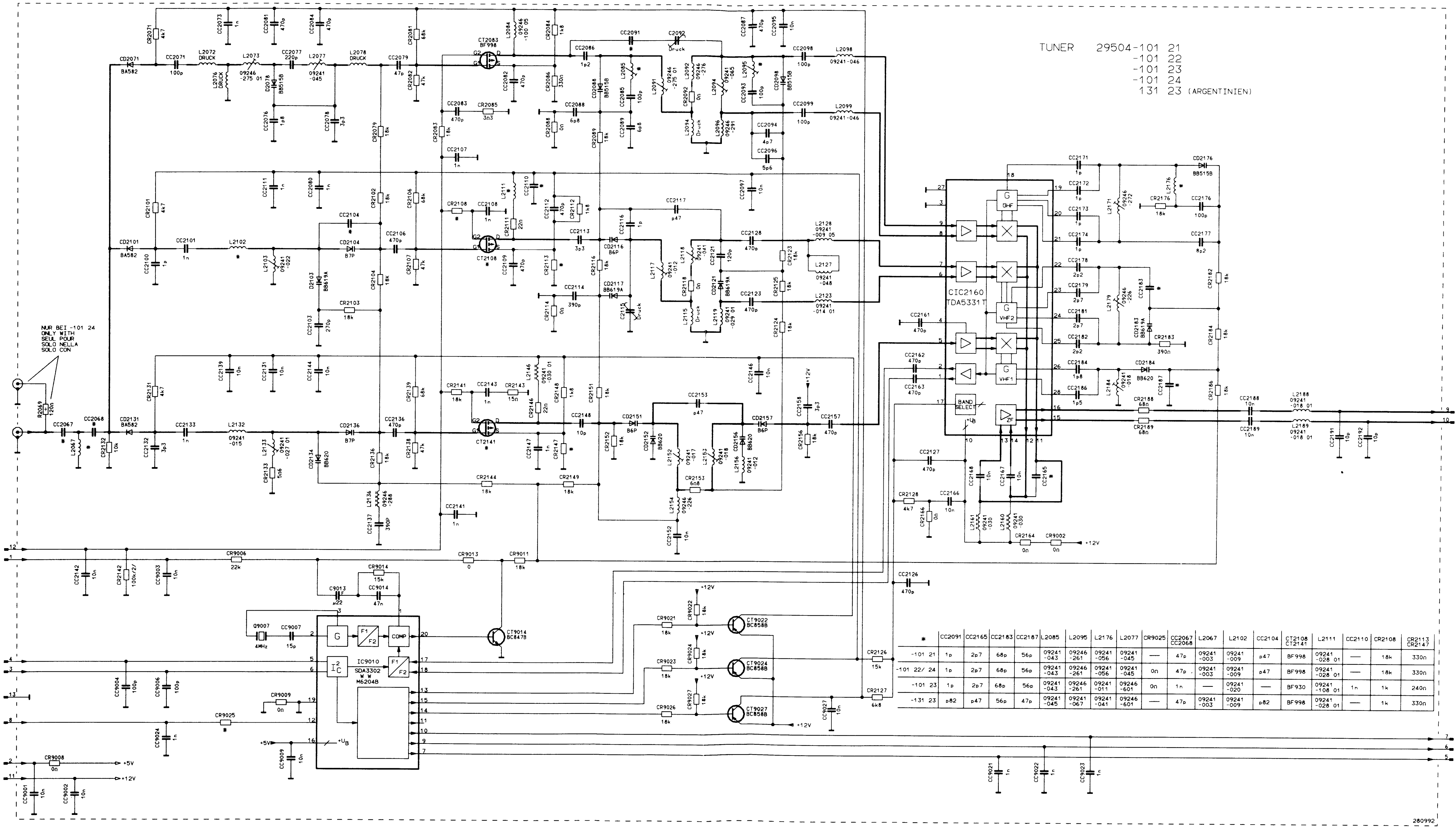
NUR BEI -101 24
ONLY WITH
SEUL POUR
SOLO NELLA
SOLO CON
CIC2160
TDA5331T
BAND SELECT
IC9010
SDA3302
M6204B
CT2083
BF998
CT2108
CT2141
CT9014
BC847B
CT9022
BC858B
CT9024
BC858B
CT9027
BC858B
Q9007
4MHz
ZF
ZF
SDA
SCL
+30V
+5V
+12V
P5
P6
P7
280992

TUNER 29504-101 21
-101 22
-101 23
-101 24
131 23 (ARGENTINIEN)

*	CC2091	CC2165	CC2183	CC2187	L2085	L2095	L2176	L2077	CR9025	CC2067 CC2068	L2067	L2102	CC2104	CT2108 CT2141	L2111	CC2110	CR2108	CR2113 CR2147
-101 21	1p	2p7	68p	56p	09241 -043	09246 -261	09241 -056	09241 -045	—	47p	09241 -003	09241 -009	p47	BF998	09241 -028 01	—	18k	330n
-101 22/ 24	1p	2p7	68p	56p	09241 -043	09246 -261	09241 -056	09241 -045	0n	47p	09241 -003	09241 -009	p47	BF998	09241 -028 01	—	18k	330n
-101 23	1p	2p7	68p	56p	09241 -043	09246 -261	09241 -011	09246 -601	0n	1n	—	09241 -020	—	BF930	09241 -108 01	1n	1k	240n
-131 23	p82	p47	56p	47p	09241 -045	09241 -067	09241 -041	09246 -601	—	47p	09241 -003	09241 -009	p82	BF998	09241 -028 01	—	1k	330n

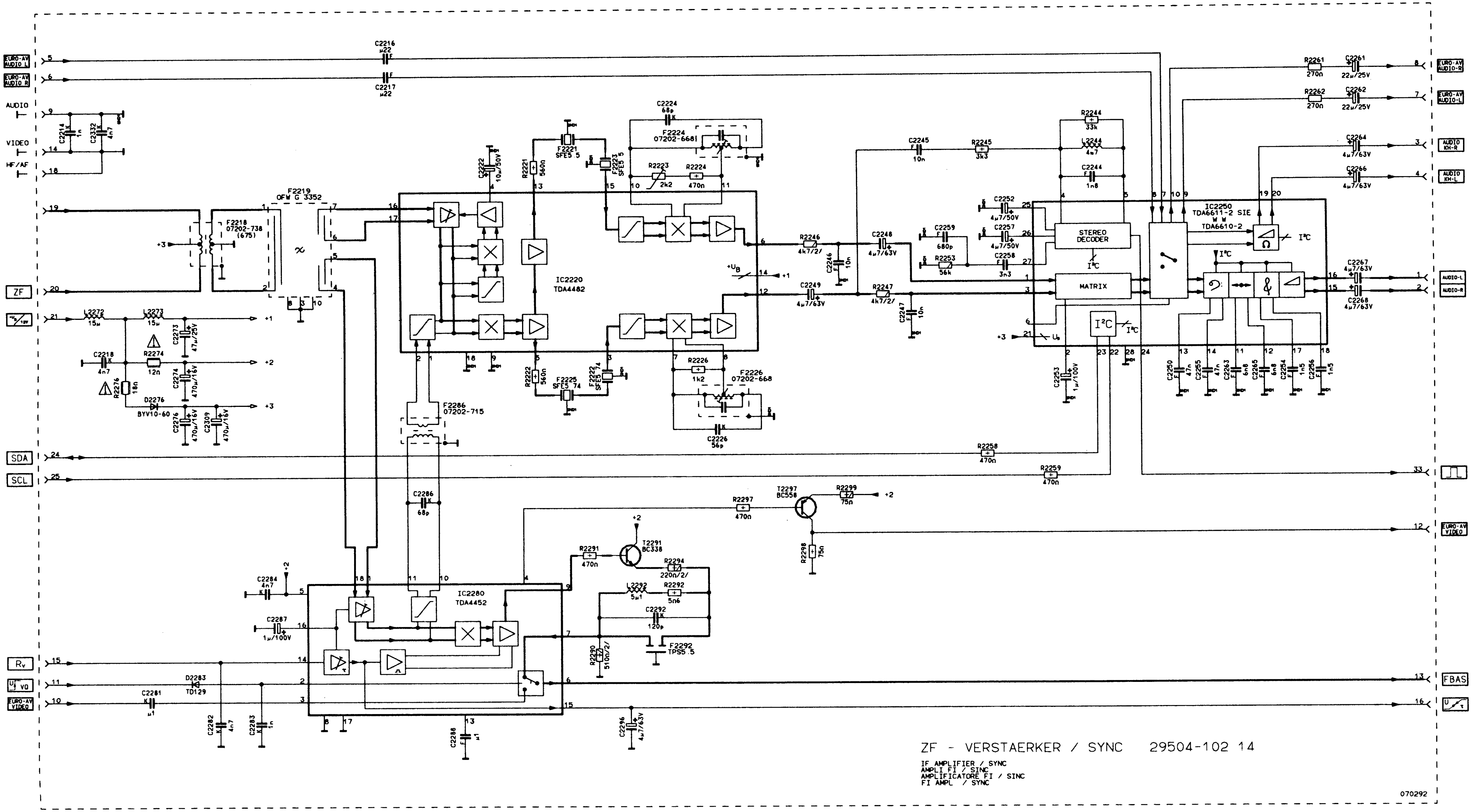
EURO-AV AUDIO L
EURO-AV AUDIO R
AUDIO
VIDEO
HF/AF
ZF
SDA
SCL
Rv
EURO-AV VIDEO
C2216 µ22
C2217 µ22
C2214 1n
C2332 4n7
F2219 OFW G 3352
F2218 07202-738 (675)
L2272 15µ
L2273 15µ
C2273 47µ/25V
C2218 4n7
R2274 12n
C2274 470µ/16V
R2276 18n
D2276 BYV10-60
C2276 470µ/16V
C2309 470µ/16V
C2222 10µ/50V
R2221 560n
F2221 SFE5.5
F2223 SFE5.5
C2224 68p
F2224 07202-6681
R2223 2k2
R2224 470n
IC2220 TDA4482
R2222 560n
F2225 SFE5.74
F2222 SFE5.74
R2226 1k2
F2226 07202-668
C2226 56p
F2286 07202-715
C2286 68p
R2246 4k7/2/
C2246 10n
C2248 4µ7/63V
C2249 4µ7/63V
R2247 4k7/2/
C2247 10n
C2245 10n
R2245 3k3
R2244 33k
L2244 4µ7
C2244 1n8
C2252 4µ7/50V
C2257 4µ7/50V
C2259 680p
R2253 56k
C2258 3n3
STEREO DECODER
MATRIX
I²C
IC2250 TDA6611-2 SIE W W TDA6610-2
C2253 1µ/100V
C2250 47n
C2265 47n
C2263 6n8
C2265 6n8
C2254 1n5
C2256 1n5
R2261 270n
C2261 22µ/25V
R2262 270n
C2262 22µ/25V
C2264 4µ7/63V
C2266 4µ7/63V
C2267 4µ7/63V
C2268 4µ7/63V
EURO-AV AUDIO-R
EURO-AV AUDIO-L
AUDIO KH-R
AUDIO KH-L
AUDIO-L
AUDIO-R
R2258 470n
R2259 470n
T2297 BC558
R2297 470n
R2299 75n
R2298 75n
EURO-AV VIDEO
T2291 BC338
R2291 470n
R2294 220n/2/
L2292 5µ1
R2292 5n6
C2292 120p
F2292 TPS5.5
R2290 510n/2/
C2284 4n7
C2287 1µ/100V
IC2280 TDA4452
D2283 TD129
C2281 µ1
C2282 4n7
C2283 1n
C2288 µ1
C2296 4µ7/63V
FBAS

ZF - VERSTAERKER / SYNC 29504-102 14

IF AMPLIFIER / SYNC
AMPLI FI / SINC
AMPLIFICATORE FI / SINC
FI AMPL / SYNC

070292

FERNBEDIENUNG 29622 - 059.01
REMOTE CONTROL
TELE COMMANDE
TELECOMANDO
TELEMANDO

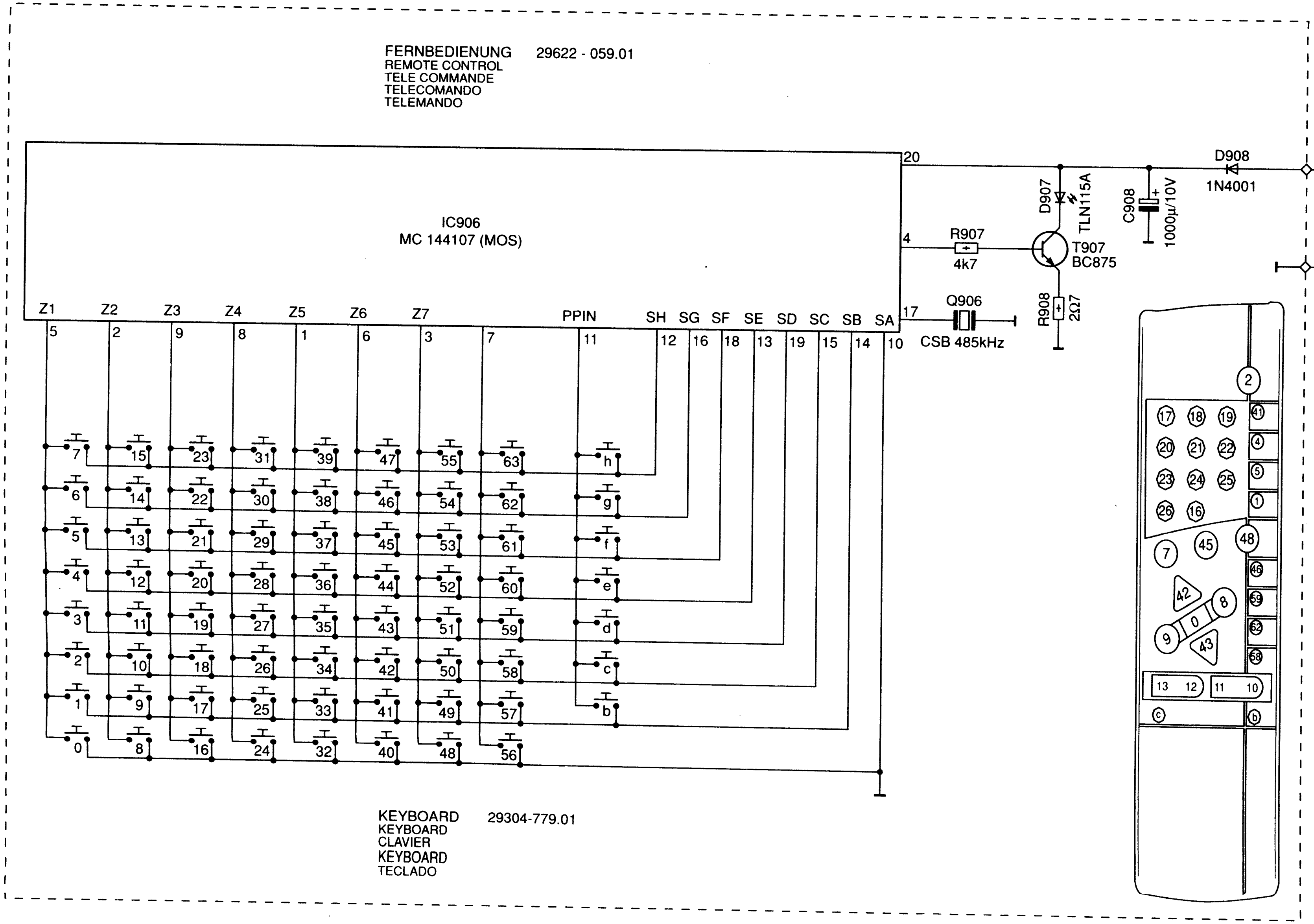
IC906
MC 144107 (MOS)
Z1 Z2 Z3 Z4 Z5 Z6 Z7 PPIN SH SG SF SE SD SC SB SA
5 2 9 8 1 6 3 7 11 12 16 18 13 19 15 14 10
20
4
17
R907
4k7
T907
BC875
D907
TLN115A
C908
1000µ/10V
D908
1N4001
9V
R908
2Ω7
Q906
CSB 485kHz
7 15 23 31 39 47 55 63 h
6 14 22 30 38 46 54 62 g
5 13 21 29 37 45 53 61 f
4 12 20 28 36 44 52 60 e
3 11 19 27 35 43 51 59 d
2 10 18 26 34 42 50 58 c
1 9 17 25 33 41 49 57 b
0 8 16 24 32 40 48 56
2
17 18 19 41
20 21 22 4
23 24 25 5
26 16 1
48
7 45
46
42 8
0 59
9 43 62
58
13 12 11 10
c b

KEYBOARD 29304-779.01
KEYBOARD
CLAVIER
KEYBOARD
TECLADO

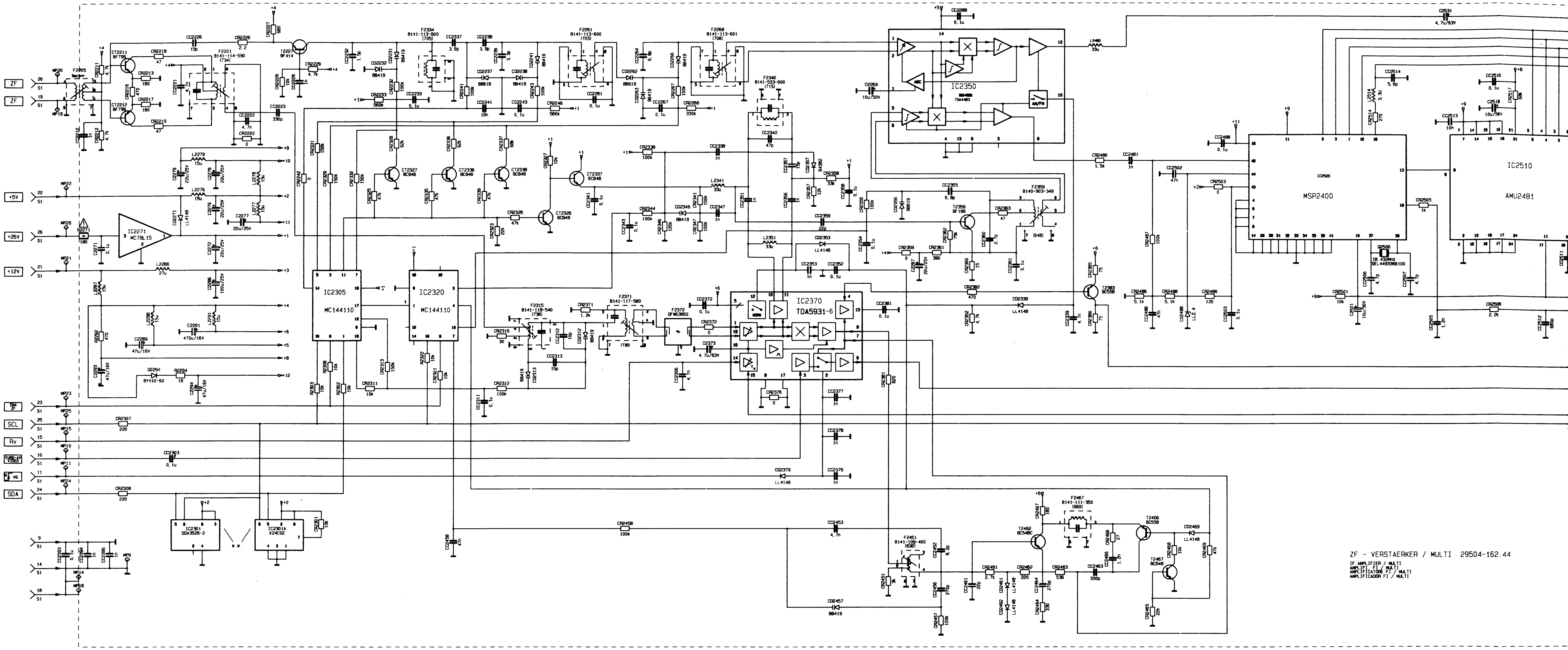

ZF - VERSTAERKER / MULTI 29504-162.44
IF AMPLIFIER / MULTI
AMPLIFI. FI / MULTI
AMPLIFICATORE FI / MULTI
AMPLIFICADOR FI / MULTI

Modulübersicht / Module list / Sommario delle moduli

CUC 1821 / 1851 / 1881 / 1891

Gerät Set Apparecchio Appareil Aparato	**Bildrohrplatte** CRT Base C. I. Tube Cathod. Piastra Cinesc. Placa Zocalo TRC	**Bedieneinheit** Control Unit Unita de comm. Unita di comando Unidad de Mando	**Netzschalterplatte** Mains switch B. C. I. Int. Secteur Piastra Int. di Rete Placa interr. Red	**Entstörplatte** Interference elimination b. C. I. antiparasitage Piastra antidisturbi Placa antiparasita	**Tuner** Tuner Tuner Tuner Tuner	**ZF-Verstärker** IF amplifier Amplificateur de FI Amplificatore FI Amplificador de FI	**Buchsenplatte** Euro-AV S. Board C. I. Prises Peri-TV P. Pr. Euro-AV Pl. con. Euro-AV	**Videotext** Teletext Teletexte Televideo Teletexto	**Video Bst.** Video Module Module Video. Modul del Video Modulo de Video	**Feature Box** Feature Box Feature Box Feature Box Feature Box	**NF Endstufe** AF output stag Prise B.F. Stadio finale B Paso final FB
M 70 - 781 IDTV	29304-070.62 29305-022.31	29501-076.93 + 29501-104.03	29304-065.93	29304-050.63	29504-101.22	29504-102.14	29304-060.93	29504-108.80	29504-105.71	29504-103.07/.09 29504-103.08/.10	29504-104.2
M 70 - 791 IDTV	29304-070.62 29305-022.31	29501-074.90	29305-165.03	-	29504-101.22	29504-162.44	29304-060.93	29504-108.80	29504-105.71	29504-103.07/.09 29504-103.08/.10	29504-104.5
M 82 - 102 IDTV	29304-070.76	29501-074.90	29305-165.04	-	29504-101.22	29504-162.44	29304-060.93	29504-108.80	29504-105.71	29504-103.07/.09 29504-103.08/.10	29504-104.5
M 95 - 102 IDTV	29304-070.77	29501-074.91	29305-165.04	-	29504-101.22	29504-162.44	29304-060.93	29504-108.80	29504-105.71	29504-103.07/.09 29504-103.08/.10	29504-104.5

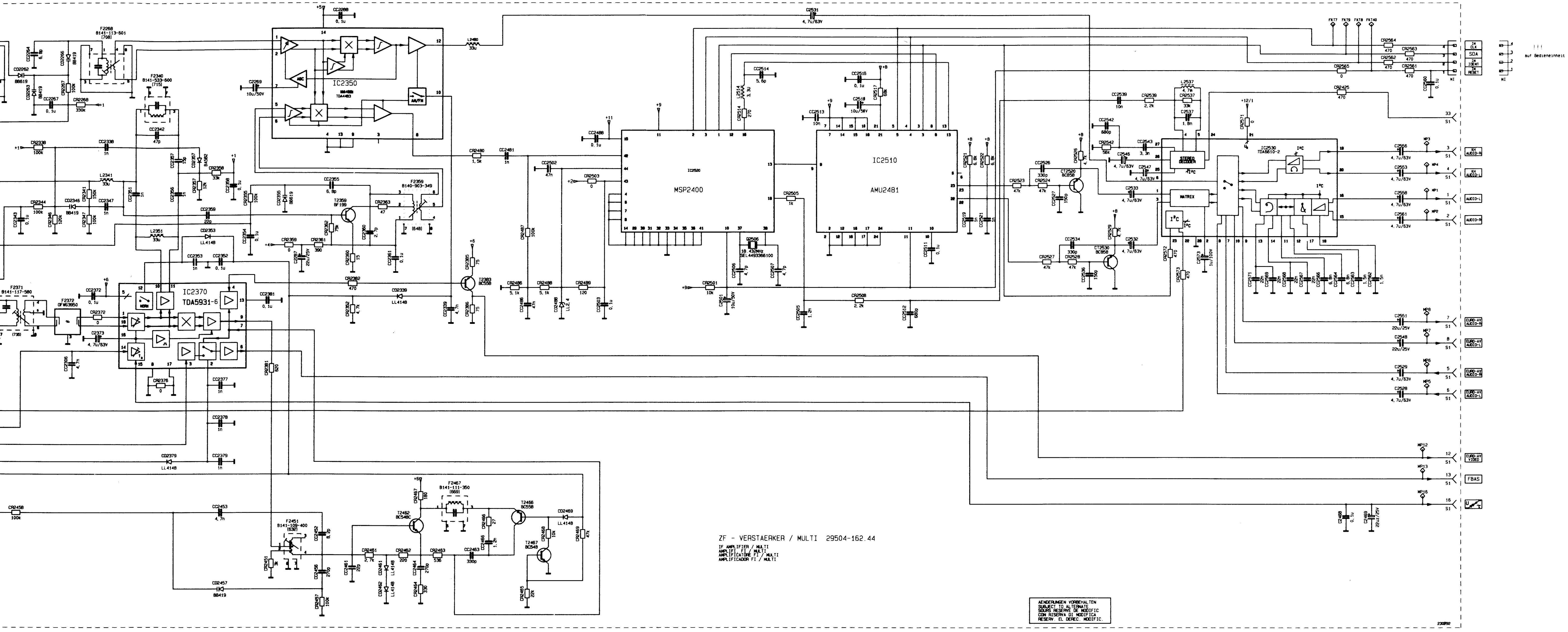
IC2350
TDA4483
AM/FM
IC2370
TDA5931-6
IC2520
MSP2400
IC2510
AMU2481
IC2530
TDA6610-2
STEREO DECODER
MATRIX
I²C
F2268
F2340
F2359
F2371
F2372
F2451
F2467
T2359
T2383
T2452
T2466
T2467
T2520
T2530
18.432MHz
FKT7
FKT9
FKT8
FKT40
IN CLK
SDA
IN IDENT
IN RESET
NI
auf Bedieneinheit
KH AUDIO-R
KH AUDIO-L
AUDIO-L
AUDIO-R
EURO-AV AUDIO-R
EURO-AV AUDIO-L
EURO-AV VIDEO
FBAS
S1

ZF - VERSTAERKER / MULTI 29504-162.44

IF AMPLIFIER / MULTI
AMPLIFI. FI / MULTI
AMPLIFICATORE FI / MULTI
AMPLIFICADOR FI / MULTI

AENDERUNGEN VORBEHALTEN
SUBJECT TO ALTERNATE
SOURS RESERVE DE MODIFIC
CON RISERVA DI MODIFICA
RESERV. EL DEREC. MODIFIC.

ario delle moduli

Netzschalterplatte Mains switch B. C. I. Int. Secteur Piastra Int. di Rete Placa interr. Red	Entstörplatte Interference elimination b. C. I. antiparasitage Piastra antidisturbi Placa antiparasita	Tuner Tuner Tuner Tuner Tuner	ZF-Verstärker IF amplifier Amplificateur de FI Amplificatore FI Amplificador de FI	Buchsenplatte Euro-AV S. Board C. I. Prises Peri-TV P. Pr. Euro-AV Pl. con. Euro-AV	Videotext Teletext Teletexte Televideo Teletexto	Video Bst. Video Module Module Video. Modul del Video Modulo de Video	Feature Box Feature Box Feature Box Feature Box Feature Box	NF Endstufe AF output stage Prise B.F. Stadio finale BF Paso final FB	Fernbedienung Remote control Tele commande Telecommando Tele mando	Netz - Chassis Mains chassis Chassis de secteur Chassis di rete Chasis interr. red	Color - Chassis Colour chassis Chassis coleur Chassis colore Chasis color
29304-065.93	29304-050.63	29504-101.22	29504-102.14	29304-060.93	29504-108.80	29504-105.71	29504-103.07/.09 29504-103.08/.10	29504-104.20	29622-059.01	29305-079.01	29701-078.01
29305-165.03	-	29504-101.22	29504-162.44	29304-060.93	29504-108.80	29504-105.71	29504-103.07/.09 29504-103.08/.10	29504-104.54	29622-059.01	29305-079.02	29701-078.02
29305-165.04	-	29504-101.22	29504-162.44	29304-060.93	29504-108.80	29504-105.71	29504-103.07/.09 29504-103.08/.10	29504-104.54	29622-059.01	29305-079.03	29701-078.03
29305-165.04	-	29504-101.22	29504-162.44	29304-060.93	29504-108.80	29504-105.71	29504-103.07/.09 29504-103.08/.10	29504-104.54	29622-059.01	29305-079.04	29701-078.04

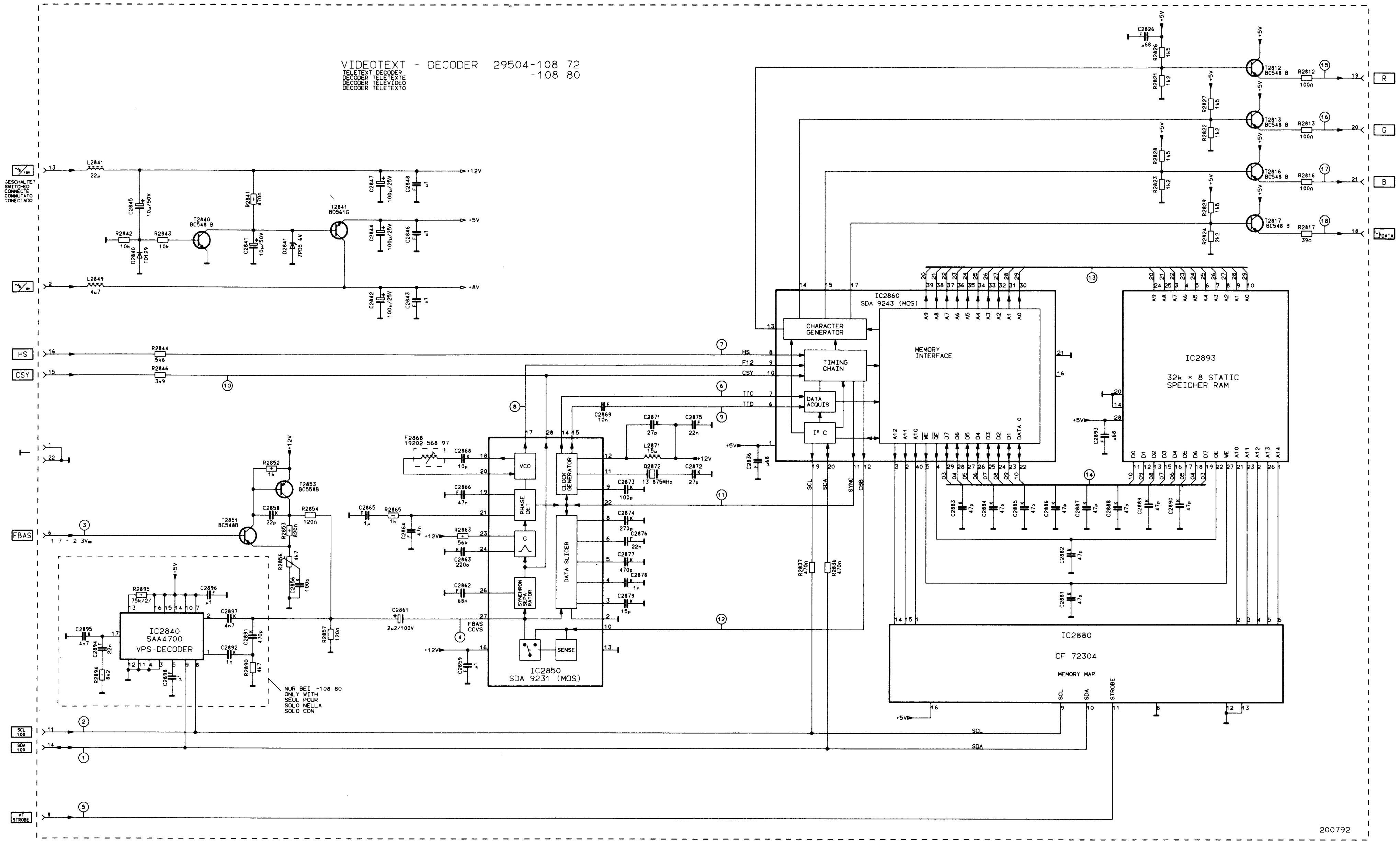
VIDEOTEXT - DECODER 29504-108 72
-108 80
TELETEXT DECODER
DECODER TELETEXTE
DECODER TELEVIDEO
DECODER TELETEXTO

GESCHALTET SWITCHED COMMUTE COMMUTATO CONECTADO
L2841 22μ
L2849 4μ7
+12V
+5V
+8V
T2840 BC548 B
T2841 BD561G
R2842 10k
R2843 10k
R2841 470Ω
C2845 10μ/50V
C2841 10μ/50V
D2841 ZPD5 6V
D2840 1D129
C2847 100μ/25V
C2848 μ1
C2844 100μ/25V
C2846 μ1
C2842 100μ/25V
C2843 μ1
HS
CSY
R2844 5k6
R2846 3k9
FBAS
1 7 - 2 3V
T2851 BC548B
T2853 BC558B
R2852 1k
C2858 22p
R2854 120n
R2853 820n
R2856 4k7
C2856 100p
R2857 120n
IC2840
SAA4700
VPS-DECODER
R2895 75k/2/
C2896 μ1
C2895 4n7
C2894 22n
R2894 8k2
C2898 μ1
C2897 4n7
C2891 470p
C2892 1n
R2890 4k7
NUR BEI -108 80
ONLY WITH
SEUL POUR
SOLO NELLA
SOLO CON
SCL 100
SDA 100
STROBE
F2868 19202-568 97
C2868 10p
C2866 47n
C2865 1μ
R2865 1k
C2864 47n
R2863 56k
C2863 220p
C2862 68n
C2861 2μ2/100V
FBAS CCVS
C2859 μ1
VCO
PHASE DET
G
SYNCHRON SEPA-RATOR
CLOCK GENERATOR
DATA SLICER
SENSE
IC2850
SDA 9231 (MOS)
C2869 10n
C2871 27p
C2875 22n
L2871 15μ
Q2872 13 875MHz
C2872 27p
C2873 100p
C2874 270p
C2876 22n
C2877 470p
C2878 1n
C2879 15p
HS
F12
CSY
TTC
TTD
IC2860
SDA 9243 (MOS)
CHARACTER GENERATOR
TIMING CHAIN
DATA ACQUIS
I² C
MEMORY INTERFACE
C2836 μ68
SCL
SDA
SYNC
CBB
R2837 470n
R2836 470n
IC2893
32k × 8 STATIC
SPEICHER RAM
C2893 μ68
C2883 47p
C2884 47p
C2885 47p
C2886 47p
C2887 47p
C2888 47p
C2889 47p
C2890 47p
C2882 47p
C2881 47p
IC2880
CF 72304
MEMORY MAP
STROBE
C2826 μ68
R2821 1k2
R2825 1k5
T2812 BC548 B
R2812 100n
R2827 1k5
R2822 1k2
T2813 BC548 B
R2813 100n
R2828 1k5
R2823 1k2
T2816 BC548 B
R2816 100n
R2829 1k5
R2824 2k2
T2817 BC548 B
R2817 39n
R
G
B
U DATA
200792

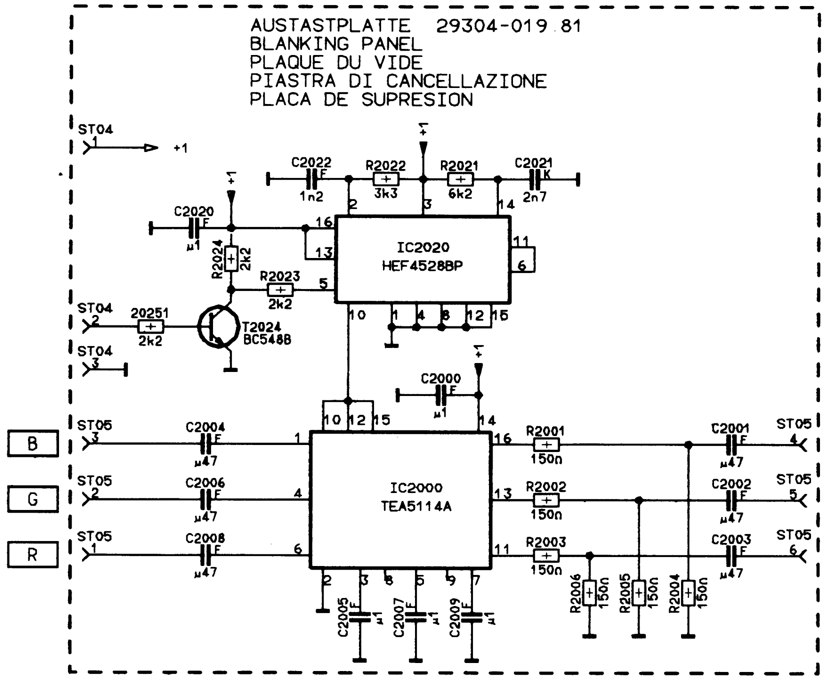
AUSTASTPLATTE 29304-019 81
BLANKING PANEL
PLAQUE DU VIDE
PIASTRA DI CANCELLAZIONE
PLACA DE SUPRESION

ST04
+1
C2022 1n2
R2022 3k3
R2021 6k2
C2021 2n7
C2020 μ1
R2024 2k2
R2023 2k2
IC2020
HEF4528BP
20251 2k2
T2024 BC548B
C2000 μ1
B
G
R
ST05
C2004 μ47
C2006 μ47
C2008 μ47
IC2000
TEA5114A
R2001 150n
R2002 150n
R2003 150n
C2001 μ47
C2002 μ47
C2003 μ47
C2005 μ1
C2007 μ1
C2009 μ1
R2006 150n
R2005 150n
R2004 150n

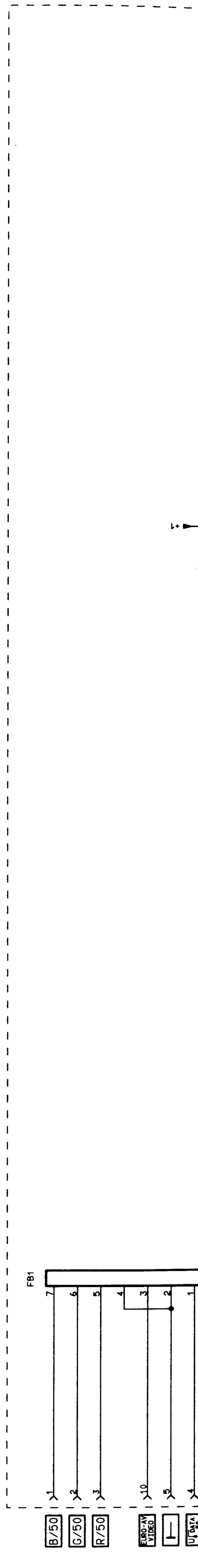
FB1
B/50
G/50
R/50

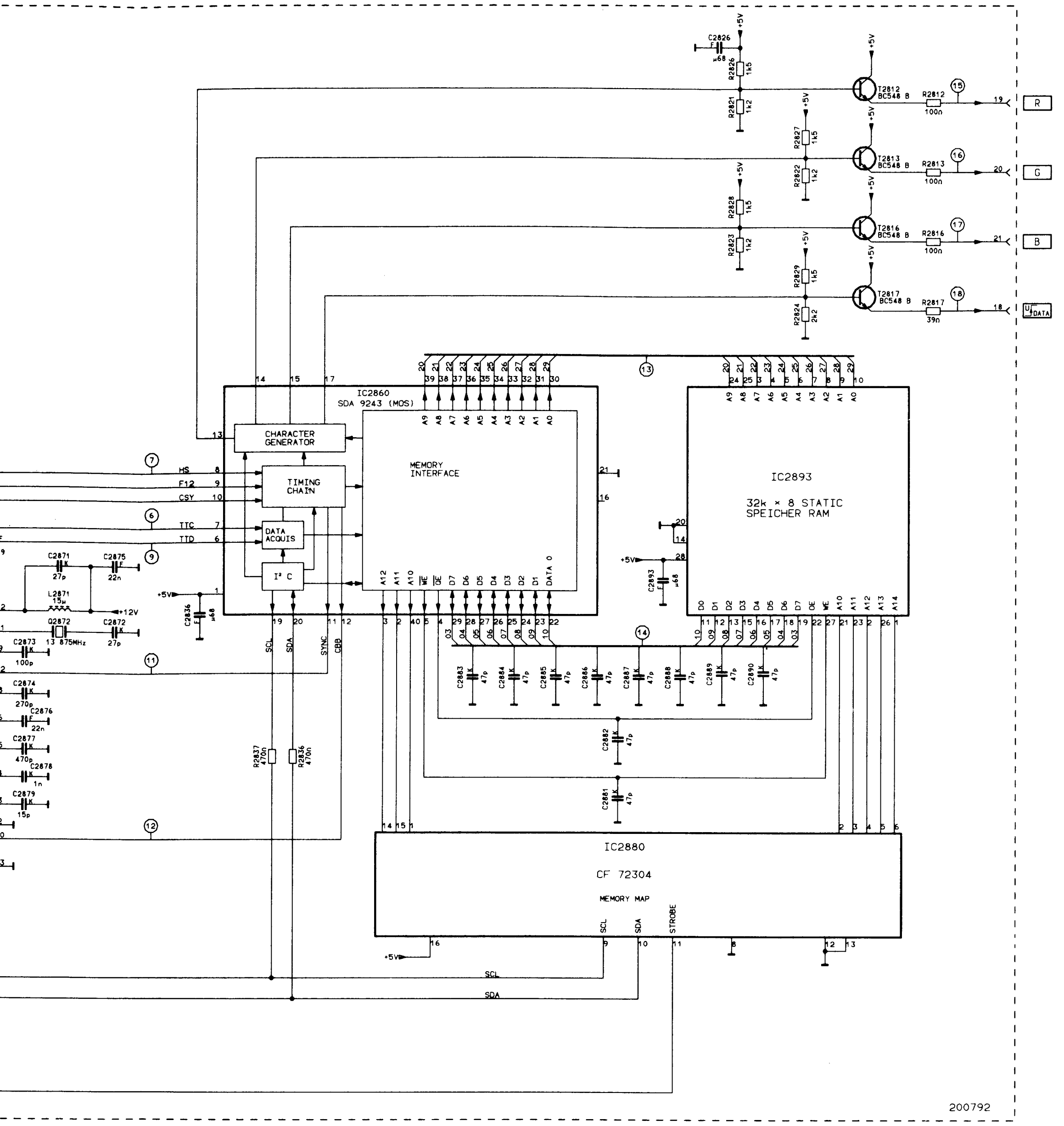
IC2860
SDA 9243 (MOS)
CHARACTER GENERATOR
TIMING CHAIN
DATA ACQUIS
I²C
MEMORY INTERFACE
IC2893
32k × 8 STATIC SPEICHER RAM
IC2880
CF 72304
MEMORY MAP
T2812 BC548 B
T2813 BC548 B
T2816 BC548 B
T2817 BC548 B
R
G
B
U DATA
SCL
SDA
200792

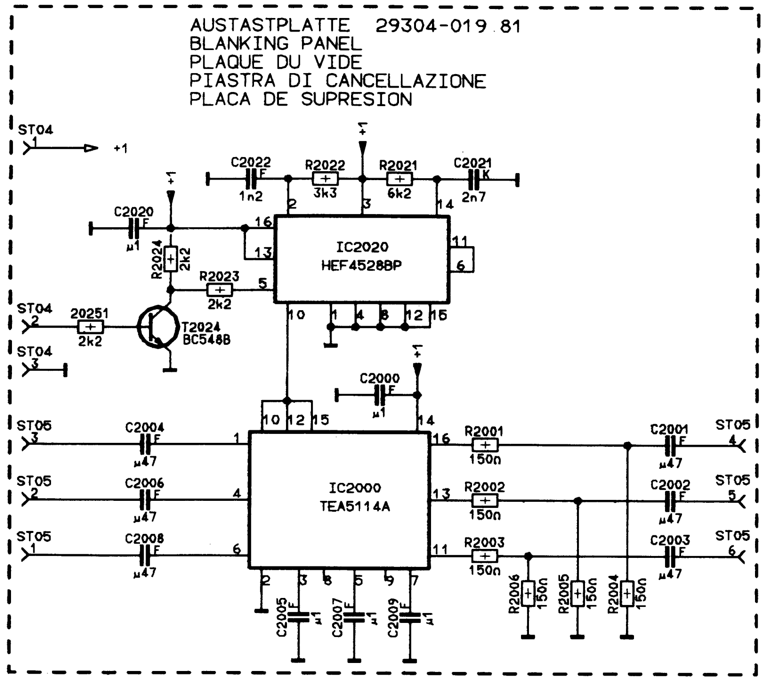

AUSTASTPLATTE 29304-019 81
BLANKING PANEL
PLAQUE DU VIDE
PIASTRA DI CANCELLAZIONE
PLACA DE SUPRESION

IC2020
HEF4528BP
IC2000
TEA5114A
T2024
BC548B
ST04
ST05
B
G
R

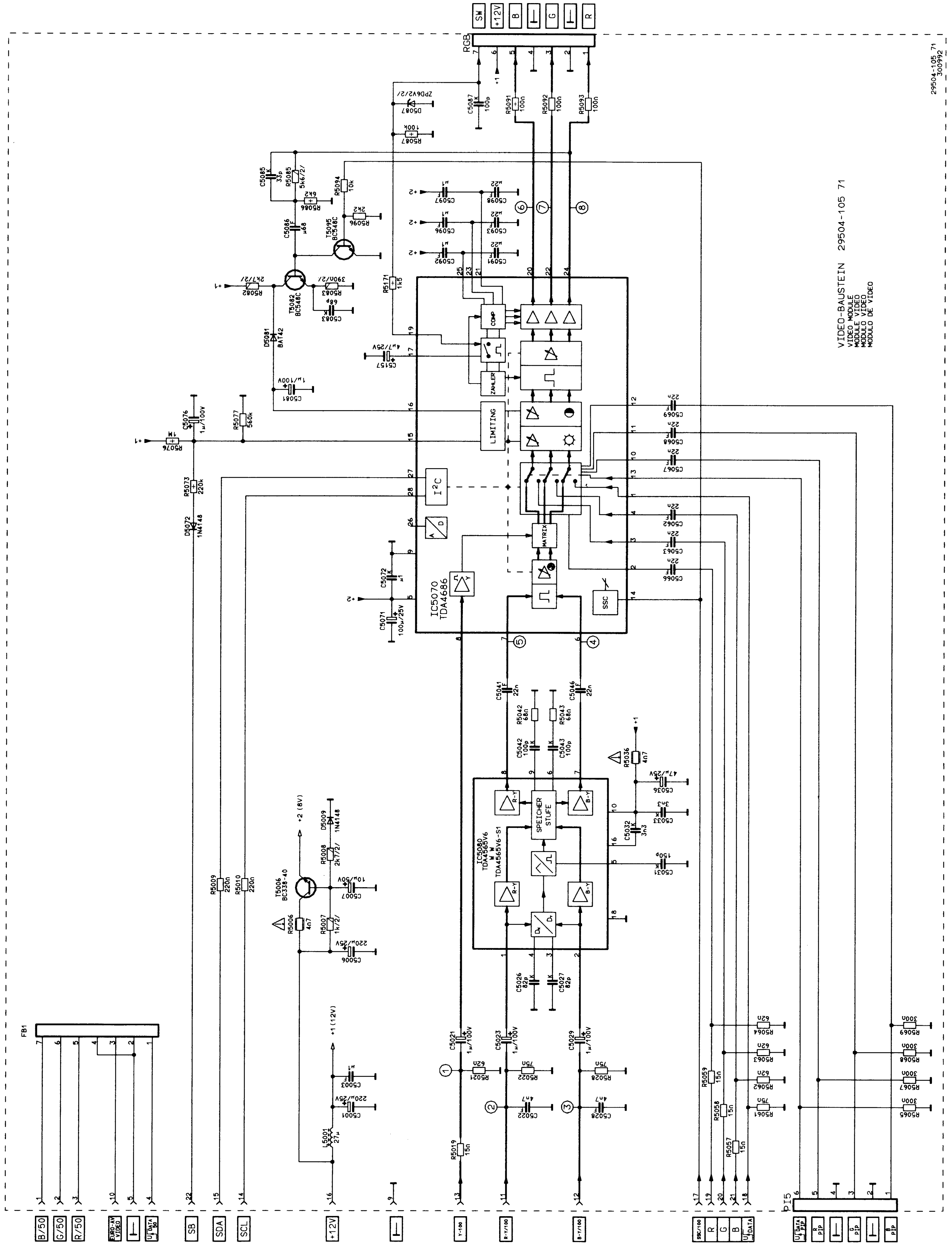
VIDEO-BAUSTEIN 29504-105 71
VIDEO MODULE
MODULE VIDEO
MODULO VIDEO
MODULO DE VIDEO
29504-105 71
300992
IC5070
TDA4686
IC5080
TDA4565V6
SPEICHER STUFE
LIMITING
I²C
MATRIX
SSC
RGB
FB1
BT5
SB
SDA
SCL
+12V

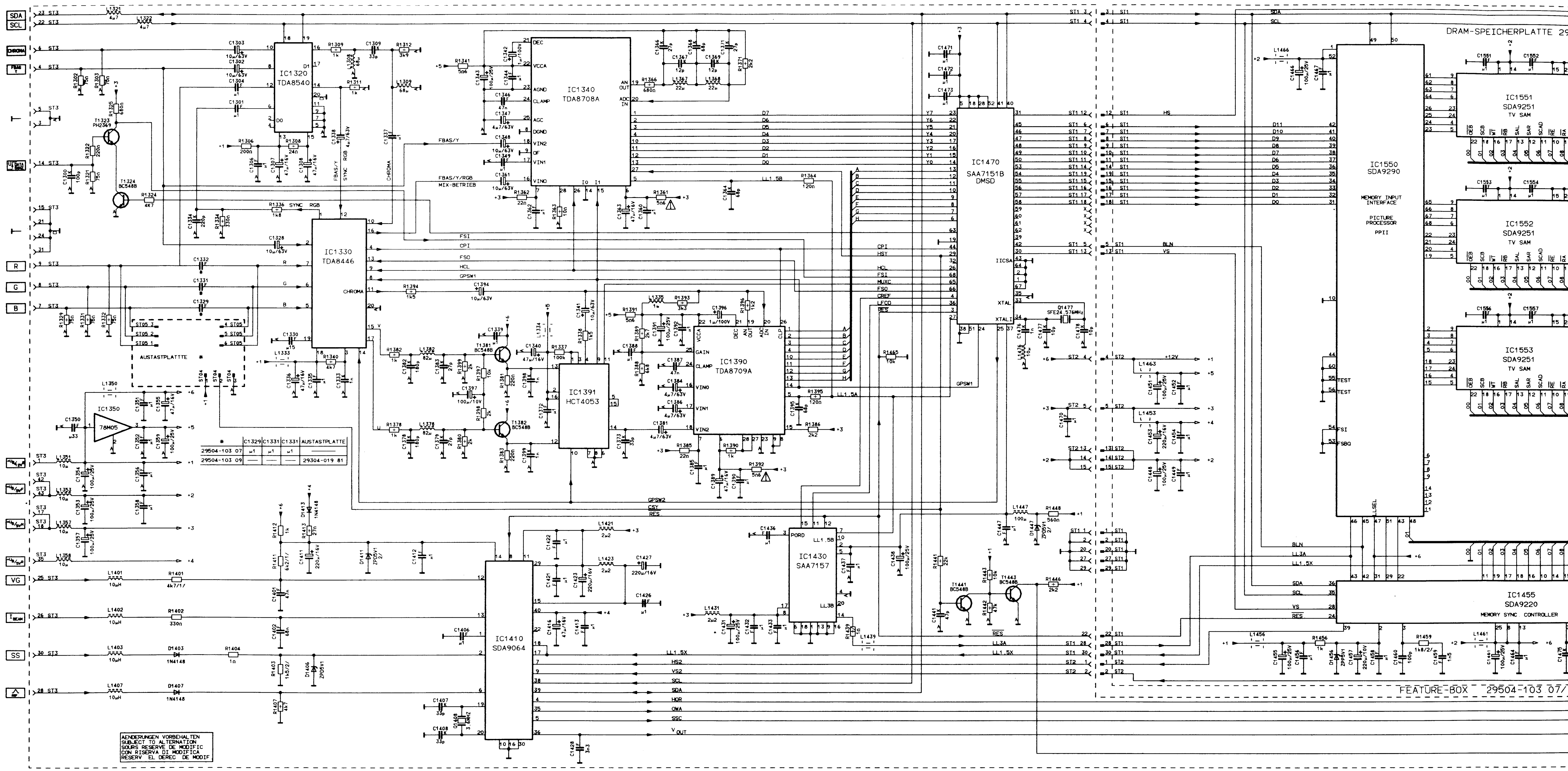
DRAM-SPEICHERPLATTE 29
FEATURE-BOX 29504-103 07/
IC1320 TDA8540
IC1330 TDA8446
IC1340 TDA8708A
IC1350 78M05
IC1390 TDA8709A
IC1391 HCT4053
IC1410 SDA9064
IC1430 SAA7157
IC1470 SAA7151B DMSD
IC1550 SDA9290 MEMORY INPUT INTERFACE PICTURE PROCESSOR PPII
IC1551 SDA9251 TV SAM
IC1552 SDA9251 TV SAM
IC1553 SDA9251 TV SAM
IC1455 SDA9220 MEMORY SYNC CONTROLLER
AUSTASTPLATTE
SDA
SCL
CHROMA
R
G
B
VG
SS
FBAS/Y
FBAS/Y/RGB MIX-BETRIEB
SYNC RGB
GPSW1
GPSW2
CSY
RES
LL1.5A
LL1.5B
LL1.5X
LL3A
HS
VS
BLN
Q1477 SFE24.576MHz

*	C1329	C1331	C1331	AUSTASTPLATTE
29504-103 07	µ1	µ1	µ1	———
29504-103 09	—	—	—	29304-019 81

AENDERUNGEN VORBEHALTEN
SUBJECT TO ALTERNATION
SOURS RESERVE DE MODIFIC
CON RISERVA DI MODIFICA
RESERV EL DEREC DE MODIF

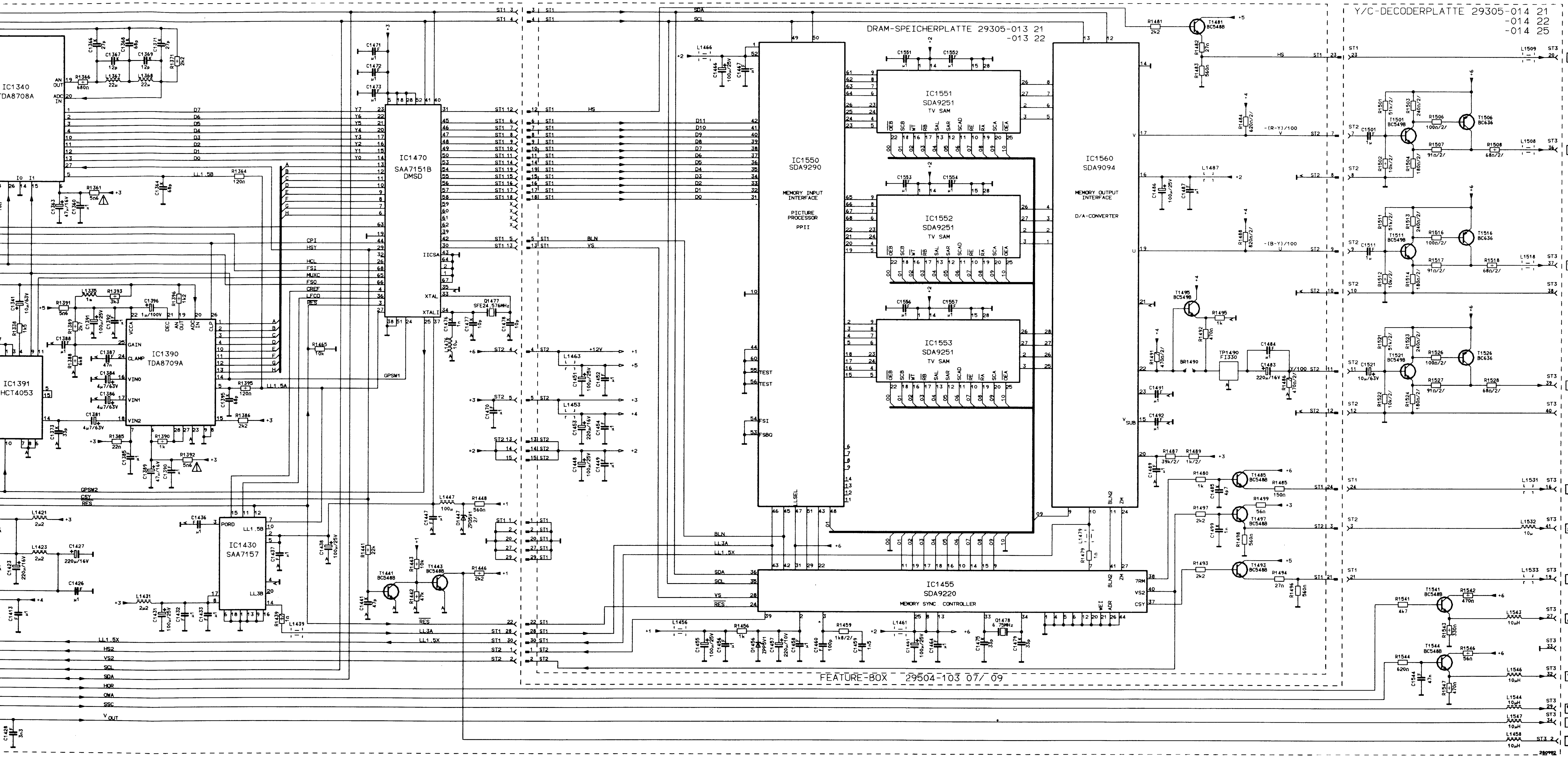

DRAM-SPEICHERPLATTE 29305-013 21
-013 22
Y/C-DECODERPLATTE 29305-014 21
-014 22
-014 25
FEATURE-BOX 29504-103 07/ 09
IC1340
TDA8708A
IC1391
HCT4053
IC1390
TDA8709A
IC1470
SAA7151B
DMSD
IC1430
SAA7157
IC1550
SDA9290
MEMORY INPUT INTERFACE
PICTURE PROCESSOR
PPII
IC1551
SDA9251
TV SAM
IC1552
SDA9251
TV SAM
IC1553
SDA9251
TV SAM
IC1560
SDA9094
MEMORY OUTPUT INTERFACE
D/A-CONVERTER
IC1455
SDA9220
MEMORY SYNC CONTROLLER
Q1477
SFE24.576MHz
Q1478
6.75MHz
TP1490
FI330
BR1490
T1441
BC548B
T1443
BC548B
T1481
BC548B
T1495
BC549B
T1485
BC548B
T1497
BC548B
T1493
BC548B
T1501
BC549B
T1506
BC636
T1511
BC549B
T1516
BC636
T1521
BC549B
T1526
BC636
T1541
BC548B
T1544
BC548B
HS
FRM
CSY
GPSW1
GPSW2
CSY
RES
LL1.5X
HS2
VS2
SCL
SDA
HOR
QWA
SSC
V OUT
LL3A
LL1.5X
BLN
VS
-(R-Y)/100
-(B-Y)/100
Y/100

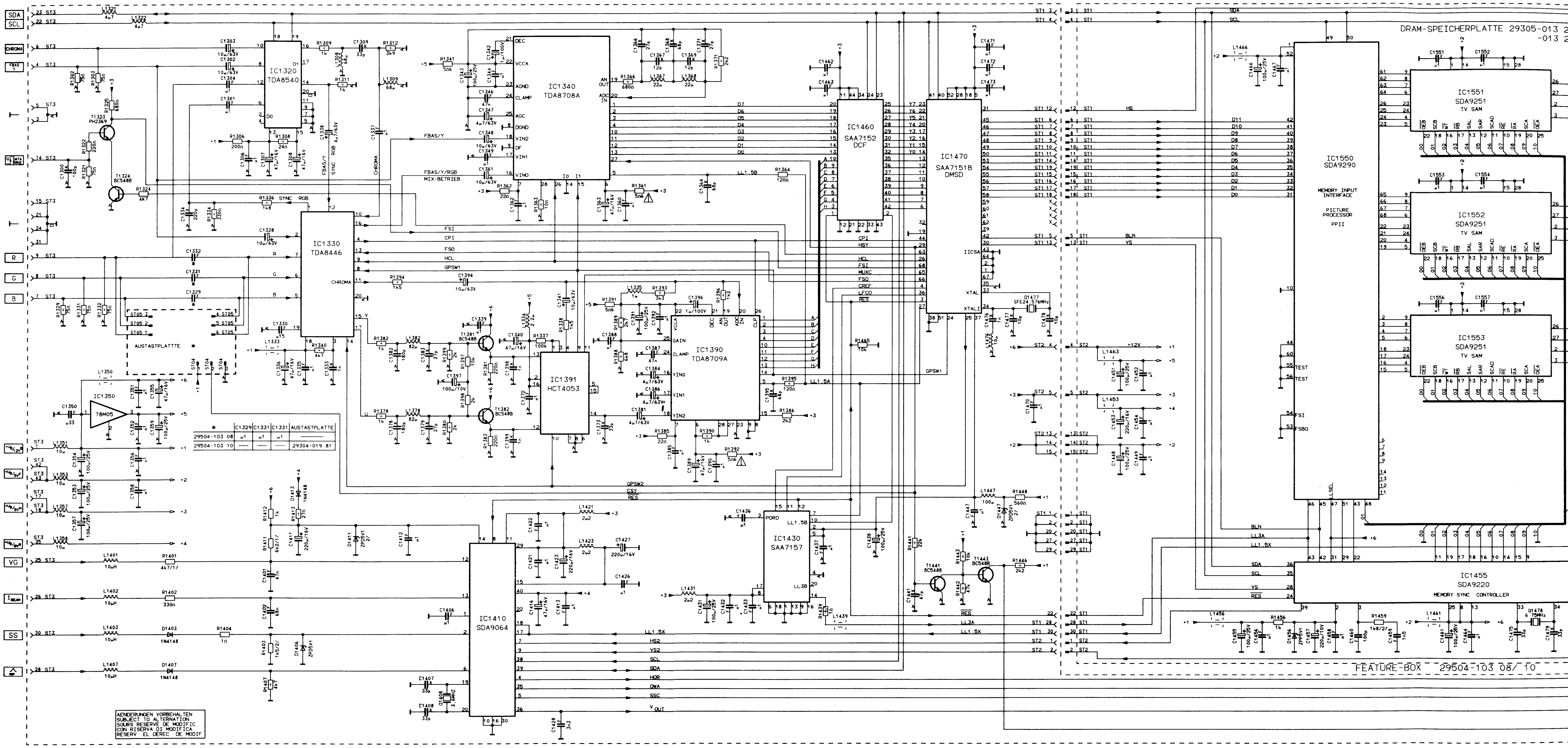
DRAM-SPEICHERPLATTE 29305-013
-013
FEATURE-BOX 29504-103 08/10
SDA
SCL
CHROMA
FBAS
R
G
B
VG
SS
IC1320 TDA8540
IC1340 TDA8708A
IC1330 TDA8446
IC1350 78M05
IC1391 HCT4053
IC1390 TDA8709A
IC1460 SAA7152 DCF
IC1470 SAA7151B DMSD
IC1410 SDA9064
IC1430 SAA7157
IC1550 SDA9290
MEMORY INPUT INTERFACE
PICTURE PROCESSOR PPII
IC1551 SDA9251 TV SAM
IC1552 SDA9251 TV SAM
IC1553 SDA9251 TV SAM
IC1455 SDA9220
MEMORY SYNC CONTROLLER
AUSTASTPLATTTE
T1323 PH2369
T1324 BC548B
T1381 BC548B
T1382 BC548B
T1441 BC548B
T1443 BC548B
Q1477 SFE24.576MHz
Q1478 6.75MHz
Q1408 3.6MHz
FBAS/Y
FBAS/Y/RGB MIX-BETRIEB
SYNC RGB
FSI
CPI
FSO
HCL
GPSW1
GPSW2
CSY
RES
LL1.5A
LL1.5X
LL3A
HS2
VS2
HDR
OWA
SSC
VOUT
BLN
HS
VS

*	C1329	C1331	C1331	AUSTASTPLATTE
29504-103 08	µ1	µ1	µ1	———
29504-103 10	——	——	——	29304-019 81

AENDERUNGEN VORBEHALTEN
SUBJECT TO ALTERNATION
SOURS RESERVE DE MODIFIC
CON RISERVA DI MODIFICA
RESERV EL DEREC DE MODIF

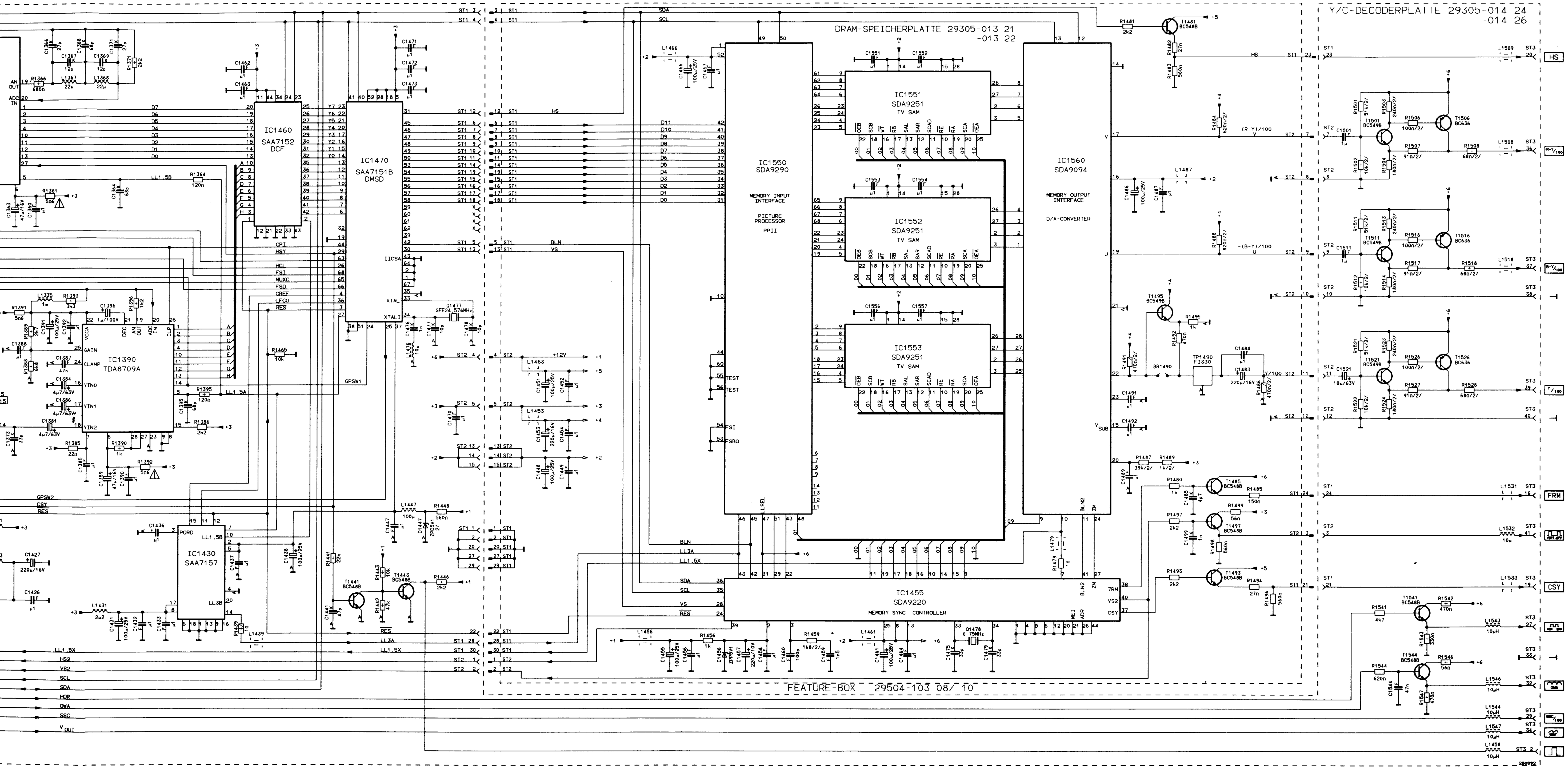

DRAM-SPEICHERPLATTE 29305-013 21
-013 22
Y/C-DECODERPLATTE 29305-014 24
-014 26
FEATURE-BOX 29504-103 08/ 10
IC1460
SAA7152
DCF
IC1470
SAA7151B
DMSD
IC1390
TDA8709A
IC1430
SAA7157
IC1550
SDA9290
MEMORY INPUT INTERFACE
PICTURE PROCESSOR
PPII
IC1551
SDA9251
TV SAM
IC1552
SDA9251
TV SAM
IC1553
SDA9251
TV SAM
IC1560
SDA9094
MEMORY OUTPUT INTERFACE
D/A-CONVERTER
IC1455
SDA9220
MEMORY SYNC CONTROLLER
T1481 BC548B
T1495 BC549B
T1485 BC548B
T1497 BC548B
T1493 BC548B
T1441 BC548B
T1443 BC548B
T1501 BC549B
T1506 BC636
T1511 BC549B
T1516 BC636
T1521 BC549B
T1526 BC636
T1541 BC548B
T1544 BC548B
Q1477 SFE24.576MHz
Q1478 6.75MHz
TP1490 FI330
BR1490
-(R-Y)/100
-(B-Y)/100
Y/100
HS
FRM
CSY
SDA
SCL
BLN
VS
LL3A
LL1.5X
RES
GPSW2
CSY
HS2
VS2
HDR
OWA
SSC
V OUT

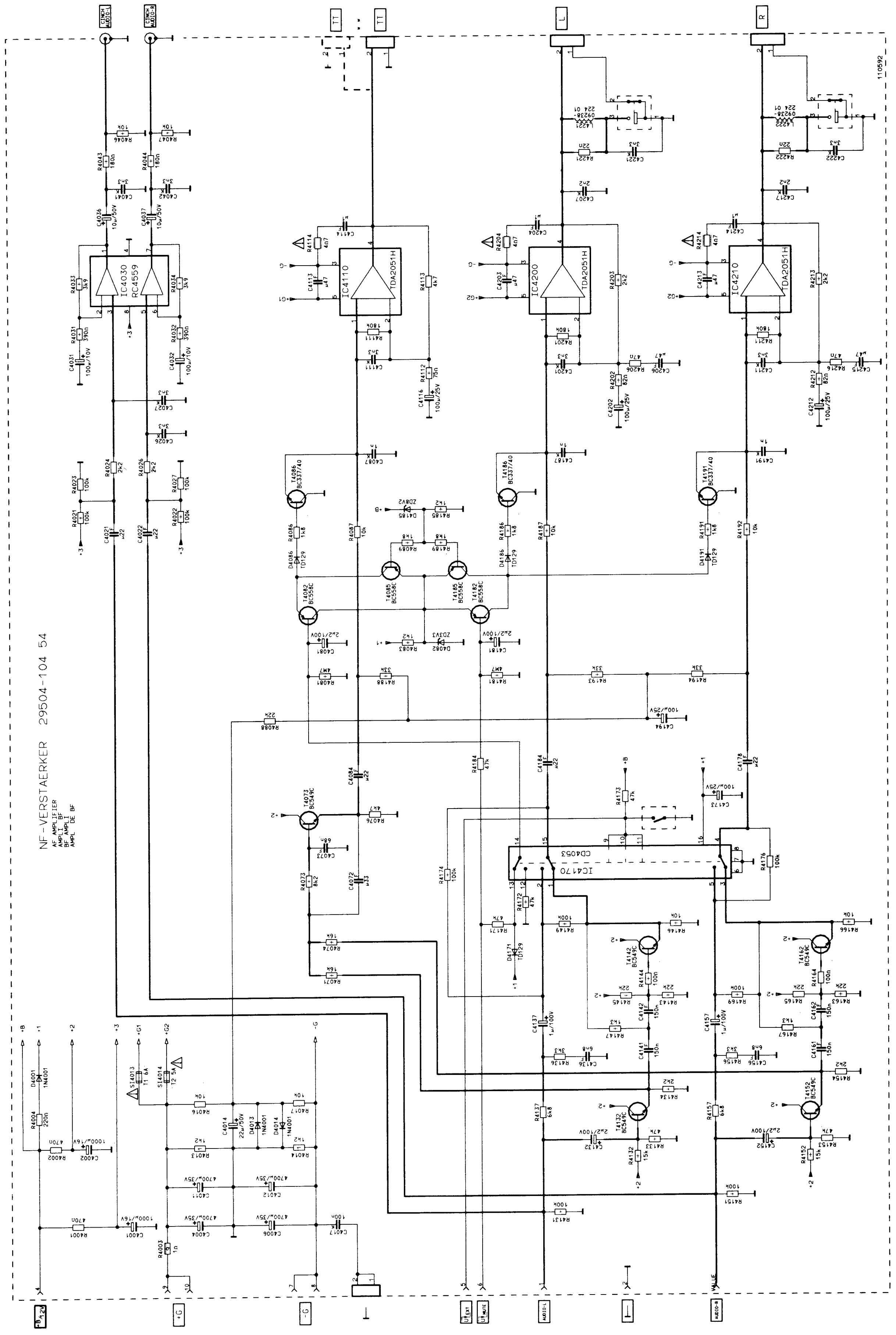
IC4030 RC4559
IC4110 TDA2051H
IC4200 TDA2051H
IC4210 TDA2051H
IC4170 CD4053

NF-VERSTAERKER 29504-104 54
AF AMPLIFIER
AMPLI BF
BF AMPLI
AMPL DE BF

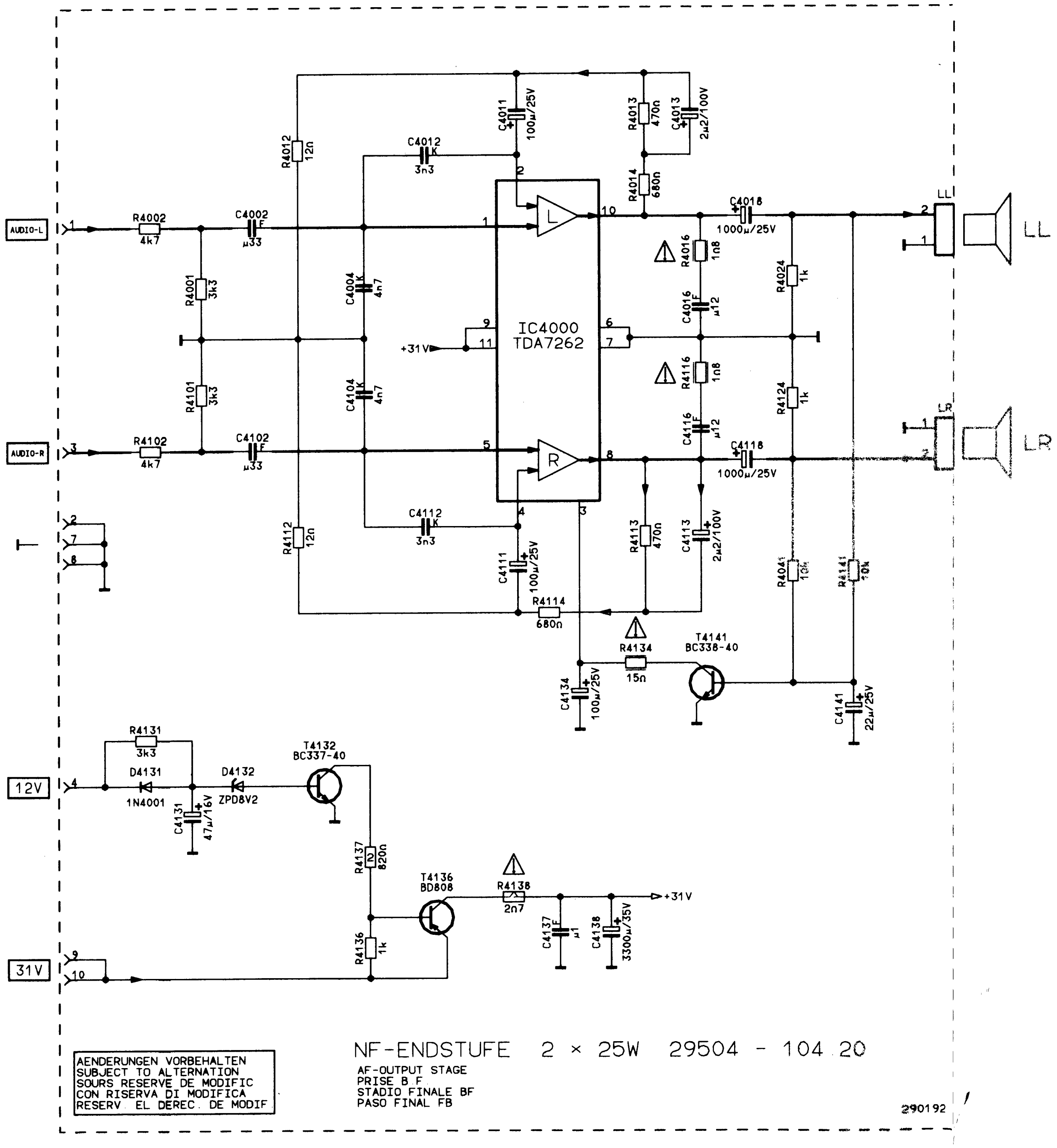
AUDIO-L
R4002 4k7
C4002 µ33
R4001 3k3
R4101 3k3
AUDIO-R
R4102 4k7
C4102 µ33
R4012 12Ω
C4012 3n3
C4004 4n7
C4104 4n7
C4011 100µ/25V
R4013 470Ω
C4013 2µ2/100V
R4014 680Ω
IC4000 TDA7262
+31V
C4018 1000µ/25V
R4016 1Ω8
C4016 µ12
R4116 1Ω8
C4116 µ12
R4024 1k
R4124 1k
C4118 1000µ/25V
LL
LR
R4112 12Ω
C4112 3n3
C4111 100µ/25V
R4114 680Ω
R4113 470Ω
C4113 2µ2/100V
R4041 10k
R4141 10k
R4134 15Ω
T4141 BC338-40
C4134 100µ/25V
C4141 22µ/25V
12V
R4131 3k3
D4131 1N4001
C4131 47µ/16V
D4132 ZPD8V2
T4132 BC337-40
R4137 820Ω
T4136 BD808
R4138 2Ω7
+31V
C4137 µ1
C4138 3300µ/35V
R4136 1k
31V

AENDERUNGEN VORBEHALTEN
SUBJECT TO ALTERNATION
SOURS RESERVE DE MODIFIC
CON RISERVA DI MODIFICA
RESERV EL DEREC. DE MODIF

NF-ENDSTUFE 2 × 25W 29504 - 104 20
AF-OUTPUT STAGE
PRISE B F
STADIO FINALE BF
PASO FINAL FB

290192

DIGI IV

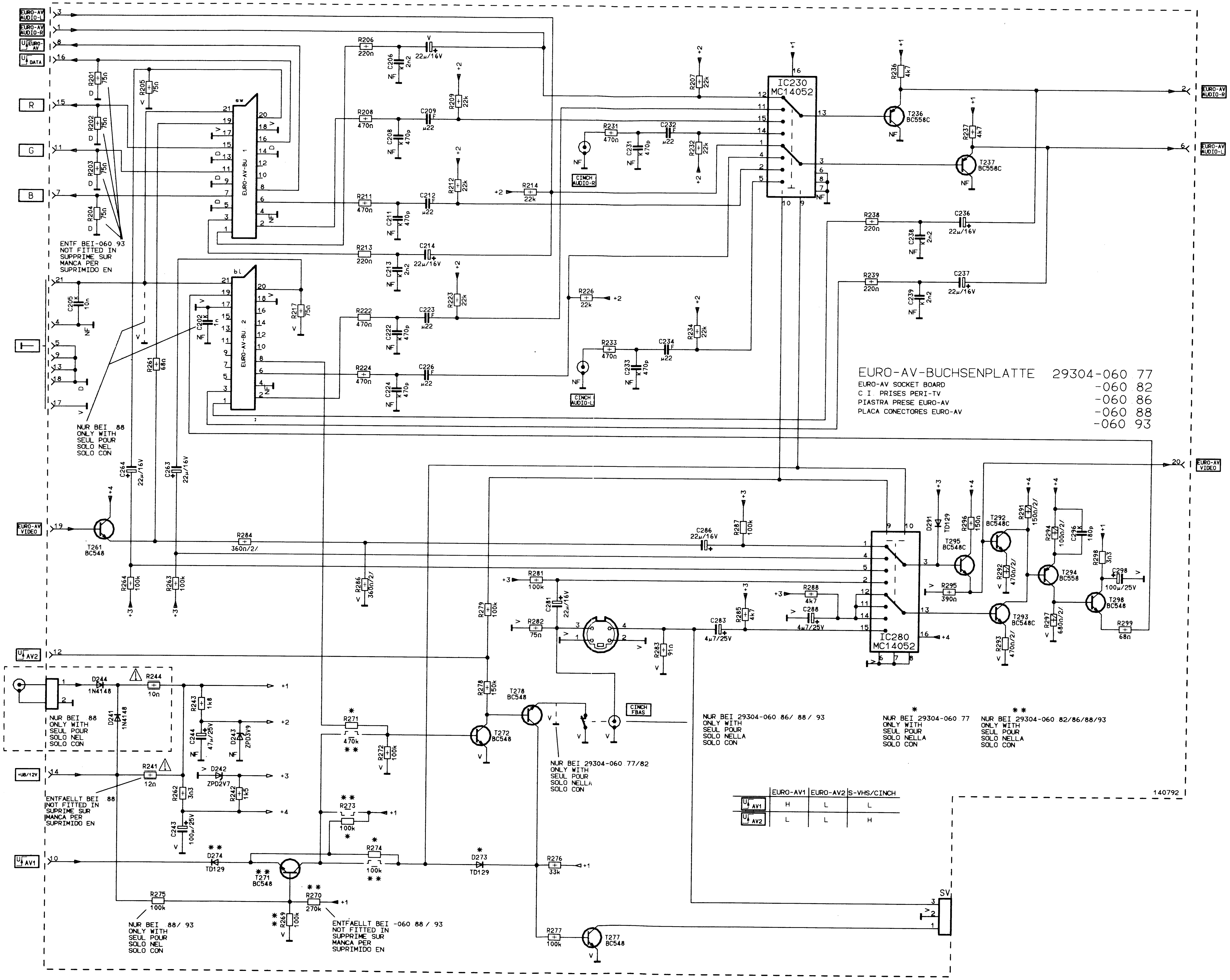

EURO-AV AUDIO-L
EURO-AV AUDIO-R
U EURO-AV
U DATA
R
G
B
EURO-AV VIDEO
U AV2
+UB/12V
U AV1
R201 75n
R202 75n
R203 75n
R204 75n
R205 75n
ENTF BEI-060 93
NOT FITTED IN
SUPPRIME SUR
MANCA PER
SUPRIMIDO EN
EURO-AV-BU 1
EURO-AV-BU 2
C205 10n
C202 1n
R217 75n
R261 68n
NUR BEI 88
ONLY WITH
SEUL POUR
SOLO NEL
SOLO CON
C264 22µ/16V
C263 22µ/16V
T261 BC548
R264 100k
R263 100k
R206 220n
C206 2n2
22µ/16V
R208 470n
C208 470p
C209 µ22
R209 22k
R211 470n
C211 470p
C212 µ22
R212 22k
R214 22k
R213 220n
C213 2n2
C214 22µ/16V
R222 470n
C222 470p
C223 µ22
R223 22k
R224 470n
C224 470p
C226 µ22
R226 22k
R231 470n
C231 470p
C232 µ22
R232 22k
R233 470n
C233 470p
C234 µ22
R234 22k
CINCH AUDIO-R
CINCH AUDIO-L
R207 22k
IC230 MC14052
R236 4k7
T236 BC558C
R237 4k7
T237 BC558C
R238 220n
C238 2n2
C236 22µ/16V
R239 220n
C239 2n2
C237 22µ/16V
R284 360n/2/
R286 360n/2/
C286 22µ/16V
R287 100k
D291 TD129
R296 150n
T295 BC548C
T292 BC548C
R291 150n/2/
R292 470n/2/
R294 100n/2/
C296 180p
T294 BC558
R298 3n3
C298 100µ/25V
T298 BC548
R299 68n
R295 390n
T293 BC548C
R293 470n/2/
R297 680n/2/
R281 100k
C281 22µ/16V
R282 75n
R283 91n
C283 4µ7/25V
R285 4k7
R288 4k7
C288 4µ7/25V
IC280 MC14052
R279 100k
R278 150k
T278 BC548
T272 BC548
R271 470k
R272 100k
CINCH FBAS
NUR BEI 29304-060 77/82
ONLY WITH
SEUL POUR
SOLO NELLA
SOLO CON
D244 1N4148
R244 10n
D241 1N4148
R243 1k8
C244 47µ/25V
D243 ZPD3V9
R241 12n
D242 ZPD2V7
R262 3n3
R242 1k5
C243 100µ/25V
ENTFAELLT BEI 88
NOT FITTED IN
SUPRIME SUR
MANCA PER
SUPRIMIDO EN
R273 100k
R274 100k
D274 TD129
T271 BC548
R275 100k
R270 270k
R269 100k
NUR BEI 88/ 93
ONLY WITH
SEUL POUR
SOLO NEL
SOLO CON
ENTFAELLT BEI -060 88 / 93
NOT FITTED IN
SUPPRIME SUR
MANCA PER
SUPRIMIDO EN
D273 TD129
R276 33k
R277 100k
T277 BC548
SV
NUR BEI 29304-060 86/ 88/ 93
ONLY WITH
SEUL POUR
SOLO NELLA
SOLO CON
*
NUR BEI 29304-060 77
ONLY WITH
SEUL POUR
SOLO NELLA
SOLO CON
* *
NUR BEI 29304-060 82/86/88/93
ONLY WITH
SEUL POUR
SOLO NELLA
SOLO CON
140792

EURO-AV-BUCHSENPLATTE 29304-060 77
EURO-AV SOCKET BOARD -060 82
C I PRISES PERI-TV -060 86
PIASTRA PRESE EURO-AV -060 88
PLACA CONECTORES EURO-AV -060 93

	EURO-AV1	EURO-AV2	S-VHS/CINCH
U AV1	H	L	L
U AV2	L	L	H